Stack Music: Spotify and the Platformization of the Digital Music Commodity

by

Kyle Robert Arcand II

Digital Art History/Computational Media
Department of Art, Art History, and Visual Studies
Duke University

Date:_____
Approved:

_____
William Seaman, Supervisor

_____
John Supko

_____
Victoria Szabo

_____
Mark Hansen

Thesis submitted in partial fulfillment of the requirements
for the degree of Master of Arts
in Digital Art History/Computational Media
in the Department of Art, Art History, and Visual Studies
in the Graduate School of Duke University

2019

ABSTRACT

Stack Music: Spotify and the Platformization of the Digital Music Commodity

by

Kyle Robert Arcand II

Digital Art History/Computational Media
Department of Art, Art History, and Visual Studies
Duke University

Date:_____
Approved:

_____
William Seaman, Supervisor

_____
John Supko

_____
Victoria Szabo

_____
Mark Hansen

An abstract of a thesis submitted in partial
fulfillment of the requirements for the degree
of Master of Arts in Digital Art History/Computational Media
in the Department of Computational Media, Arts & Cultures
in the Graduate School of
Duke University

2019

Copyright by
Kyle Robert Arcand II
2019

Abstract

Digital platforms play an increasingly prevalent role in 21st century capitalism. They shape our search results, facilitate our communication habits, structure our workdays, reinforce our communities, and increasingly impact cultural life in ways that extend beyond mere communications. Their interfaces influence decisions about what films to watch, their algorithms recommend what songs and podcasts we enjoy, and their agreements with distributors frequently determine even the most basic access to digital media today. The current largest music streaming service in the world, Spotify plays an important role in cultural life today, asserting itself as a networked intermediary between users, advertisers, and the music industry in an effort to capitalize on the infrastructural aspects of cultural access through ad-supported and subscription-based music streaming options.

This thesis explores what Anne Helmond has called the "platformization" of digital media, with a specific focus on the Swedish music platform Spotify.[1] Building on Jeremy Wade Morris' notion of the "digital music commodity," I argue that Spotify's efforts to situate digital music within their own software system align with recent trends in the technical and intermediary structures known as platforms.[2] The stack, the software scaffolding present beneath nearly all of today's major platforms, offers a useful lens into discussions of such software intermediaries at scale, providing insight

[1] Helmond, "The Platformization of the Web: Making Web Data Platform Ready," 1.
[2] Morris, *Selling Digital Music, Formatting Culture*, 2.

into the material basis that platforms rely on in daily operation.[3] Each chapter focuses on a single aspect of the organizing logic of Spotify, tracing the broad superstructure of the platform to its source in software tools. Across chapters on machine listening, recommendation algorithms, and digital platforms in totality, the work stresses the ways platforms have become "a new business model capable of extracting and controlling immense amounts of data" with the rise of these large, economy-shaping intermediaries.[4]

[3] Stack is common term in software development, see Bratton, *The Stack: On Software and Sovereignty* and Kaldrack and Leeker, *There Is No Software, There Are Just Services*.
[4] Srnicek, *Platform Capitalism*, 6.

Contents

Abstract iv
List of Figures vii
Introduction 1
1. Song as Signal: Machine Listening and Music Information Retrieval 7
1.1 Spotify and the Echo Nest 7
1.2 A Brief History of Music Information Retrieval 11
1.3 Tympanic Reproduction and the Cultural Origins of Informatic Sound 16
1.4 Speech, Sound, and Code 21
1.5. The Cocktail Party Problem 23
1.6 Music Information Retrieval and the Digital Music Commodity 25
1.7 Machine Listening and the Commodification of Perception 27
2. The Algorithmic Logic of Spotify 31
2.1 Discover Weekly and the Quantification of Taste 31
2.2 Taste Profiles and the Datafication of Listening 35
2.3 Discover Weekly and Algorithmic Culture 37
2.4 The Soft Biopolitics of Algorithmic Culture 40
2.5 Algorithmic Culture and the Regime of Computation 45
3. The Platformization of Digital Music 48
3.1 Platform Paradigm 48
3.2 Defining Platforms 51
3.3 Multi-Sided Markets and Financialization 53
3.4 Platform as Data Broker 55
Conclusion 58
Appendix 62
Bibliography 63

List of Figures

Figure 1: Claude Shannon's original schematic diagram from "A Mathematical Theory of Communication." 12

Figure 2: Tariqullah Jan and Wenwu Wang's diagrammatic representation of Cherry's cocktail party problem. 14

Figure 3: An 1876 model of Blake and Bell's phonautograph. 18

Figure 4: A 2015 screenshot of Spotify's Discover Weekly. 38

Introduction

It's a cool, breezy afternoon in the shadow of New York's financial district, and Daniel Ek is about to become a billionaire.[5] The co-founder and CEO of the company, Ek shifts back and forth at center stage, caught in the heat of an electric-green display in a sport coat, headset, and sneakers. Like a JumboTron televangelist or breathless TED Talk guru, the Swedish entrepreneur speaks with a measured enthusiasm, emphasizing the still-nascent potential of the last decade of his work with Spotify. "Our mission is to unlock the potential of human creativity by giving a million creative artists the opportunity to live off their art, and billions of fans the opportunity to enjoy and be inspired by these creators," he says.[6] Over the next two hours, the 35-year-old technologist unpacks the mechanics of the digital platform, painting in broad strokes the ways that Spotify has helped musicians and entrepreneurs alike finally escape the looming threat of music piracy. "Fans wanted all the world's music for free immediately," he says.[6] "What we did was to build a better experience. We built something that could compete against piracy and made sure all the artists were compensated for their work."[6]

Since its founding in 2006, Spotify has become the largest music streaming platform in the world. With over 159 million active monthly users and 71 million premium subscribers in 2017, the company has been hailed as a savior for the music

[5] Ingham, "Spotify Co-Founders Own An Estimated $1.8Bn Stake in Company."
[6] Ek, "Spotify Investor Day."

industry, earning both praise and financial support from the so-called "big three" major record labels (Warner Music Group, Universal Music Group, and Sony Music Entertainment), as well as widespread adoption as a consumer technology.[7] With a market foothold in 65 countries and territories, the platform has continued to expand across the globe, hosting video, podcasts, and numerous live concert offerings in the years since its founding while still claiming music as its primary focus, even as new analytics and advertising features make the company more valuable to artists and agents alike.[8] "Our data on insights connects artists with fans, so that they learn from their fans like never before," Ek continued in the Investor Day presentation.[8] "They can talk to their fans directly, sell concert merchandise, and even invite superfans to special events. They can, of course, better understand what songs are getting better traffic, whichever ones are being skipped. This transparency is unheard of in our industry...Why does this matter? Through this, the power is rebalanced."[8]

While his Investor Day presentation has its faults, glossing over much of digital music's complex history in the interest of telling a simple corporate narrative, it is my aim here to explore the shift in power Ek describes, with a focus on the "platformization" of recorded audio in the digital commodity space.[9] As one of the first commodities to be subjected to widespread digitization, stripped of pecuniary value, and consolidated into corporate models like today's numerous ad-supported and

---

[7] Schneider, "Universal Music Says Artists Would Benefit From a Spotify Equity Sale." Ingham, "Here's Exactly How Many Shares the Major Labels and Merlin Bought in Spotify And What Those Stakes Are Worth Now."
[8] Ek, "Spotify Investor Day."
[9] Helmond, "Platformization of the Web," 1.

subscription-based streaming options, digital audio offers a unique case study in what's been termed 'informational,' 'cognitive,' 'high-tech,' or 'MP3 capitalism' by scholars such as Fredric Jameson, Antonio Negri, Yann Moulier-Boutang, Christian Fuchs, Nick Srnicek, Wolfgang Fritz Haug, Richard Sennett, and more.[10] Building on Jeremy Wade Morris' notion of the "digital music commodity" as "a particular combination of data and sound that exists as an entity in and of itself for sale or acquisition in online outlets via computers or other digital portable devices," I argue that Spotify's efforts to situate digital music within their own software system align with recent trends in the technical and intermediary structures known as platforms.[11] As scholars like Tarleton Gillespie and Anne Helmond have noted, the term has emerged at the locus of numerous computational, architectural, figurative, and political definitions, establishing a newfound link between the public and the services they rely on in everyday life.[12] Yet a closer look the "platformization" of today's internet landscape reveals numerous intersecting applications beneath the surface of these multi-sided intermediaries.[13] The stack, the software scaffolding present beneath nearly all of today's major platforms, provides a useful lens into discussions of such software intermediaries at scale; as scholars like Seth Erickson, Christopher Kelty, Nick Srnicek, and Benjamin Bratton have noted, software stacks reveal the material basis of platforms, grounding the "increasing

---

[10] See Jameson, *Postmodernism, or, the Cultural Logic of Late Capitalism*; Negri, *Reflections on Empire*; Moulier Boutang, *Cognitive Capitalism*; Fuchs, *Digital Labour and Karl Marx*; Srnicek, *Platform Capitalism*; Haug, *High-Tech-Kapitalismus*; and Sennett, *The Culture of the New Capitalism* for more on informational, cognitive, high-tech, and MP3 capitalism.
[11] Morris, *Selling Digital Music*, 2.
[12] Gillespie, "The Politics of 'Platforms,'" 348.
[13] Helmond, "Platformization of the Web," 1.

ephemerality" of such intermediaries in the "programming languages, package managers, databases, [and] libraries" on which they rely.[14]

Each chapter focuses on a single aspect of the organizing logic of Spotify, tracing the broad superstructure of the platform to its source in software tools. Threading the cultural history of sound reproduction outlined by music technology scholar Jonathan Sterne through more recent developments in machine audition and music information retrieval, Chapter 1 demonstrates the ways in which signal processing tools like Spotify's Audio Analysis API challenge foundational assumptions about human listening in an effort to extract meaning and value from the digital music commodity. Where early sound reproduction technologies like the ear phonautograph used complex approximations of the human ear in what Sterne has called "tympanic" reproduction, so-called 'machine listening' relies on a series of software tools designed to situate the digital music file within the broader organizing logic of the platform.[15] Chapter 2 examines Spotify's Taste Profile and popular Discover Weekly playlist in the context of the company's shift from a searchable archive to a series of "branded musical experiences," challenging assumptions about music's commodification at the level of the individual art object.[16] The third chapter analyzes the platform as a unified object of study at the intersection of software and economic markets; drawing on the work of

---

[14] Erickson and Kelty, "The Durability of Software." In *There Is No Software, There Are Just Services*, eds. Kaldrack and Leeker, 45. Stack is common term in software development, see Bratton, *The Stack: On Software and Sovereignty* and Kaldrack and Leeker, *There Is No Software, There Are Just Services* for more.

[15] Sterne, *The Audible Past: Modernity, Technology, and the Cultural History of Sound*, 22.

[16] Morris and Powers, "Control, Curation, and Musical Experience in Streaming Music Services," 107.

Nick Srnicek and Benjamin Bratton, as well Patrick Vonderau's work on the "financialization" of digital media, the chapter analyzes the relationship between Spotify's software stack and the contemporary music marketplace, as well as the ways that the word "platform" has become a "broadly progressive sales pitch" used as much by technology companies as by the people that rely on their services.[17] The final section offers a few concluding remarks on possible alternatives to centralization, as well as details regarding areas of future research.

My aim is to provide a broad overview of Spotify as it relates to more general developments in platform capitalism, but each chapter is far from a complete picture. Drawing on a number of texts specific to sound studies, I hope to situate my work within this tradition, even as recent developments in software studies, screen studies, visual design studies, and other media studies approaches threaten to displace music's centrality amid what Lev Manovich has termed the "softwarization" of digital culture.[18] While the visual language of software interfaces is central to any discussion of digital platforms, a focus on the user experience and product design aspects of Spotify remains outside of the scope of this project, even as digital interfaces play a growing role in how platforms are conceptualized by their users. Discussion of advertising's role in the music industry is also limited to recent changes since the widespread introduction of digital platforms. Much more thorough histories of commercial radio, television, print, and digital advertising currently exist, but the bulk of their material extends beyond of the

---

[17] Vonderau, "The Spotify Effect: Digital Distribution and Financial Growth," 4. Gillespie, "The Politics of 'Platforms,'" 348.
[18] Manovich, *Software Takes Command*, 335.

focus of this project. My aim here is to speak to music's shifting commodity status with the advent of digital platforms, providing an overview of a few of the many software components at work beneath the surface of the world's largest music streaming platform, and the ways that they contribute to music's changing role within the lives of listeners.

1. Song as Signal: Machine Listening and Music Information Retrieval

1.1 Spotify and the Echo Nest

In early 2005 just before completing their PhDs at the MIT Media Lab, Brian Whitman and Tristan Jehan founded the Echo Nest. A "music intelligence company" committed to finding a scalable way of determining the role that recorded music played in the social lives of its listeners, the Echo Nest represented the culmination of Jehan's PhD work on machine audition and acoustic analysis, as well as Whitman's research on text mining and natural language processing.[19] The company was purchased by Spotify in 2014 in an effort to integrate their recommendations system into the Spotify software stack directly, rather than through their public application protocol interface, or API, as was the case prior to the acquisition.[20] As Spotify's Vice President and Global Head of Ad Monetization Brian Benedik once stated at the Hivio conference in Los Angeles, "We frankly tried to out Echo Nest the Echo Nest and we couldn't do it. After a period of time, we just said, 'We gotta buy these guys, we gotta bring them in-house and that needs to power everything we do with playlists, music discovery, and music intelligence.'"[21]

For Spotify, the Echo Nest's two-tiered approach offered an efficient, information-rich way of structuring music recommendations at scale. Where companies like Amazon and the now-defunct Firefly Network were once known for their use of

[19] The Echo Nest, "Our Company."
[20] The Echo Nest, "Spotify Acquires The Echo Nest."
[21] Ramsey, "Spotify After Apple Music: Brian Benedik at Hivio 2015."

collaborative filtering models, which recommend media by cross-referencing users' web behavior and purchasing habits with limited nuance, the Echo Nest instead sought to analyze music at two fundamental levels: those of the digital audio signal and those of a work's cultural context through text analysis. In a 2012 blog post, Whitman notes that this approach gave them the unique ability to "scale with care," utilizing pre-existing datasets taken both from digital music files and from text-based online discussion to create a complex taxonomy of musical understanding ostensibly similar to how people classify music in their personal lives.[22] As former Echo Nest CEO Jim Lucchese added in a separate interview that year:

> "The company is really based on the concept of combining both that cultural understanding and that acoustic understanding in a single platform to understand music more like the way people do: both culturally what your friends are listening to, your values around music, and the descriptive terms, but also the acoustic signal itself of how you and I hear music. The Echo Nest is really about combining those two in a single platform to have a depth of understanding that wasn't possible beforehand."[23]

While some degree of overlap certainly exists between these computational and humanistic approaches to musical understanding, any investigation into the Echo Nest's two-tiered system must acknowledge their differences in practice. Where human hearing is inseparably linked to the bodily constraints of perception that, as Jonathan Sterne has noted, have guided sound reproduction technologies since the nineteenth century, machine listening tools challenge assumptions about what sound is, and how it can be made useful in a computational setting. Just as natural language processing treats

---

[22] Whitman, "How Music Recommendation Works—and Doesn't Work."
[23] ArtistsHouseMusic, "Music Industry Profile: Jim Lucchese of The Echo Nest."

text as a raw material to be crawled, scraped, and mined for use in application-based data science projects, machine listening is premised on the belief that sound, too, can function as utility.[24] Building on a history of sound reproduction technologies like the MPEG-1 Layer-3, or MP3, audio codec which, as Sterne has noted elsewhere, rely on modes of "perceptual technics" to economize the transmission of sound through informatic networks, the Echo Nest starts from a place of digital cultural abundance in an effort to locate meaning, value, and utility in the digital audio file.[25]

This chapter offers a critical analysis of the field of machine listening known as music information retrieval (MIR). With Spotify and the Echo Nest as points of entry, my aim is to give a general overview of the field's history, drawing on scholarship from Claude Shannon, E. Colin Cherry, John Stephen Downie, and others in an effort to demonstrate the many aspirations for MIR technology since its beginnings in information theory. Additionally, my discussion of the Echo Nest is part of a broader interest of Spotify's software stack and the "platformization" of digital music as mentioned in my introduction.[26] Drawing on Jeremy Wade Morris' definition of the "digital music commodity" as it applies to the increasingly fraught relationship between digital audio files and their circulation on digital platforms, I argue that Spotify's investment in MIR is based on a desire to extract meaning and value from the digital file.[27] This becomes just one small part of the company's effort to build a computational

---

[24] Sterne, *Audible Past*.
[25] Sterne, *MP3: The Meaning of a Format*, 19.
[26] Helmond, "Platformization of the Web," 1.
[27] Morris, *Selling Digital Music*, 2.

system attuned to the minute specifics of aural perception, now at the scale of the world's biggest music streaming platform.

As newer acoustic ventures continue to problematize any understanding of music as a "standardized" commodity as demonstrated by essays like Theodor Adorno's "On the Fetish-Character in Music and the Regression of Listening," MIR remains an important field of research, especially in light of recent developments in acoustic search engines and personal voice assistants.[28] My focus here is on acoustic analysis and MIR, even as these approaches are increasingly combined with other data science and machine learning methods popular in computational research today. Similarly, text analysis also lies outside of the scope of the project, even as it proves to be a central component of the Echo Nest's technology. Numerous resources on text analysis currently exist, and my discussion of the subject here is intentionally limited to occasional comparisons between MIR and text analysis as adjacent fields of research.

Additionally, the black-box nature of Spotify makes it a difficult object of study, especially regarding the platform's changing use of MIR since the Echo Nest acquisition. While the Echo Nest's patented 'Analyze' API has since been incorporated into the 'Audio Analysis' and 'Audio Features' aspects of Spotify's public API, details about the use of this acoustic data in the broader context of Spotify's current recommendation systems are hard to obtain with certainty, and I make no claims about the technology used by Spotify today.[29] By pointing to the specific moment of acquisition, I hope to

---

[28] Adorno, *The Culture Industry: Selected Essays on Mass Culture*, 40.
[29] Jehan and DesRoches, "Analyzer Documentation." Spotify, "Web API Reference."

orient my work for this chapter around Spotify's recent past, namely the years leading up to the Echo Nest acquisition in March 2014.[30] In light of these constraints, my aim is to offer a compelling analysis of the MIR methods used by one of today's biggest music recommendation systems in a way that both builds on earlier sound studies scholarship and ultimately contributes to a better understanding of how sound operates on digital platforms today.

1.2 A Brief History of Music Information Retrieval

While the history of recorded sound certainly predates any active attempt at computational analysis, much of the technology builds on a lineage indebted to the work of two scholars at AT&T's Bell Labs: Claude Shannon and Warren Weaver. In his landmark 1948 essay "A Mathematical Theory of Communication," Shannon notably conceptualized communication not in terms of dialogue and interlocutors, but as a fundamental distinction between signal and noise in the transmission of information across a telephone line. An early step toward the rationalization of sound as an information-rich resource, Shannon notes the importance of separating a message's semantic meaning from the technical aspects of its transmission electronically. He writes:

> "The fundamental problem of communication is that of reproducing at one point either exactly or approximately a message selected at another point. Frequently the messages have *meaning*; that is they refer to or are correlated according to some system with certain physical or conceptual entities. These semantic aspects of communication are irrelevant to the engineering problem."[31]

---

[30] The Echo Nest, "Spotify Acquires The Echo Nest."

[31] Shannon, "A Mathematical Theory of Communication," 1-2.

For Shannon, the study of message-transmission was a technological challenge specifically separate from the meaning of the transmission itself, a distinction that would remain consistent across the field in years to come.

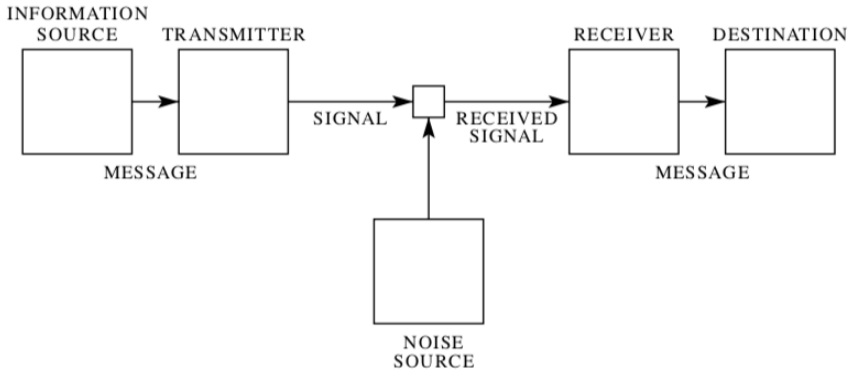

Figure 1: Claude Shannon's original schematic diagram from "A Mathematical Theory of Communication."[31]

In his introduction to what later became their expansive, co-authored book *The Mathematical Theory of Communication*, Warren Weaver notes the possibility of adapting Shannon's model to other forms of acoustic meaning-making, extending the emphasis on technical transmission into a more general theory of communication. He writes:

> "The language of this memorandum will often appear to refer to the special, but still very broad and important, field of the communication of speech; but practically everything said applies equally well to music of any sort, and to still or moving pictures, as in television."[32]

While Weaver most likely had radio bandwidth in mind with his mention of music, it's the resilience of their model that makes it particularly relevant to acoustic analysis. In 1953, just five years after Shannon's initial theory, E. Colin Cherry identified the cocktail party problem as a difficult task for acoustic meaning-making with technology, one that

[32] Shannon and Weaver, *The Mathematical Theory of Communication*, 3-4.

anticipated greater challenges in years to come. Originally published in *The Journal of the Acoustical Society of America*, "Some Experiments on the Recognition of Speech, with One and with Two Ears" outlines Cherry's earliest attempt to separate an individual stimulus in the form of a single speaker's voice from the noisy roar of a hypothetical party in the background. He writes, "On what logical principles could one design a machine whose reaction, in response to speech stimuli, would be analogous to that of a human being? How could it separate of two simultaneous spoken messages?"[33]

Even fifty years after its initial postulation, Cherry's cocktail party problem is far from solved completely, and the seemingly-straightforward challenge has only branched outward into more specialized studies as the field has grown. In their contribution to the 2011 information science reference *Machine Audition: Principles, Algorithms and Systems*, Tariqullah Jan and Wenwu Wang highlight progress made on the challenge, noting the necessity of distinguishing between speech, music, and natural sounds, each of which have specific sonic characteristics that require unique approaches in the field. Citing Donald Hall's seminal *Musical Acoustics*, the pair note that a music source is made up of a "sequence of notes or tones produced by musical instruments," and that "each note is *composed of a signal*" emitted from a resonant source.[34]

---

[33] Cherry, "Some Experiments on the Recognition of Speech, with One and with Two Ears," 976.
[34] Jan and Wang, "Cocktail Party Problem: Source Separation Issues and Computational Methods" in *Machine Audition: Principles, Algorithms and Systems*, ed. Wang, 62-63.

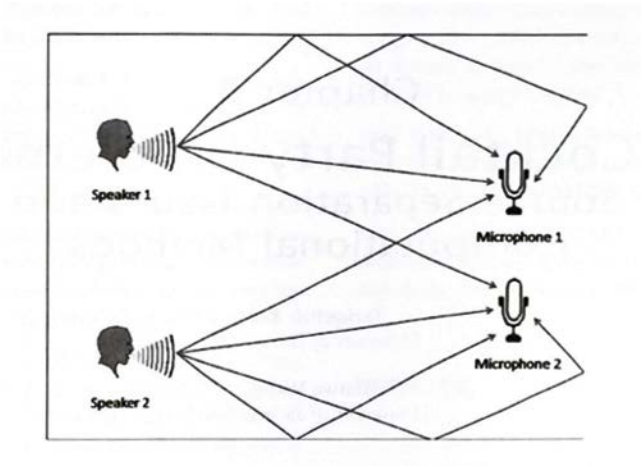

Figure 2: Tariqullah Jan and Wenwu Wang's diagrammatic representation of Cherry's cocktail party problem.[34]

Like Shannon's theory, the cocktail party problem represents a formative inquiry into conceptualizations of the audio signal as a form of information—first as speech, but later adapted to musical understanding—and it's this school of thought that would eventually inform the computational field known as music information retrieval. Dedicated to developing "innovative content-based searching schemes, novel interfaces, and evolving networked delivery mechanisms in an effort to make the world's vast store of music accessible to all," the field strives make sense of musical data in all its forms, often for use in recommendation algorithms, electronic music tools, and other, largely utilitarian applications.[35] One of the earliest published uses of the phrase appears in Michael Kassler's 1966 article "Toward Music Information Retrieval," which describes an ambitious programming language for the IBM-7094 computer that aimed to organize every possible musical feature into a series of textual characters to be read and interpreted by the machine. "Music information retrieval, as I conceive it, is the task of

[35] Burgoyne, Downie, and Fujinaga, "Music Information Retrieval."

extracting, from a large quantity of musical data, the portions of that data with respect to which some particular musicological statement is true," Kassler notes.[36]

In the decades that followed, scholars of pitch tracking and note identification would begin to embrace new forms of computational music notation, in part thanks to the doctoral work of Anders Askenfelt, James Anderson Moorer, and Chris Chafe.[37] Scholars like Roger Dannenberg, Barry Vercoe, Arshia Cont and Marco Stroppa have continued to shape the field of score tracking, while others like Ananya Misra, Perry Cook, and Ge Wang have produced innovative work on environmental audio synthesis.[38] Much of this work was made possible by the widespread availability of digital audio files, which continues to play a key role throughout the field of audio information retrieval today.[39] A defining moment for information retrieval at the level of the digital file, acoustic fingerprinting technology has recently allowed users to mark, tag, and analyze aspects of audio as a linear waveform for reference in databases or for automated retrieval by software applications.[38] While search query efforts based on singing or humming represent the earliest aspirations of the technology, recent developments like SoundHound and Shazam, as well as Apple's Siri voice assistant and Google's Now Playing tool, have each brought audio fingerprinting to consumer devices in the form of popular search-by-signal technologies, isolating small fractions of sound

---

[36] Kassler, "Toward Music Information Retrieval," 66.
[37] Burgoyne, Downie, and Fujinaga, "Music Information Retrieval."
[38] Cont, Arshia. "On the Creative Use of Score Following and Its Impact on Research." Misra, Ananya, et al. "A New Paradigm for Sound Design."
[39] Downie, "Music Information Retrieval," 317-326.

files and pairing them with acoustic and textual matches for the information online.[40] The technology has also been crucial to the rise of intelligent voice assistants like the Amazon Echo, Apple HomePod, and Google Home, as well as automated copyright identification systems like those used SoundCloud and YouTube.[41] In addition to a variety of complex digital tasks, such systems routinely distinguish speech from background noise, identify popular music at the level of the digital audio file, and offer numerous other computational solutions made possible through forms of acoustic information retrieval.

1.3 Tympanic Reproduction and the Cultural Origins of Informatic Sound

While the term music information retrieval represents a collection of fairly recent efforts to organize and structure digital audio for computational use, aspects of the technology are premised on a much longer history of sound reproduction built on implicit assumptions about human perception dating back to the Enlightenment. In *The Audible Past*, Jonathan Sterne notes that where sound was once limited to the affective impact of acoustic vibrations on the human body, nineteenth-century engineers "measured, objectified, isolated, and simulated" sound as a rationalized "object of

---

[40] See Wang, "An Industrial-Strength Audio Search Algorithm," Capes et al., "Siri On-Device Deep Learning-Guided Unit Selection Text-to-Speech System," and Lyon, "Google's Next Generation Music Recognition" for more on fingerprinting with acoustic interfaces and 'intelligent personal assistants.'

[41] See Rodehorst, "Why Alexa Won't Wake Up When She Hears Her Name in Amazon's Super Bowl Ad," Ion, "Could Google's 'Smart Sound' Be More Than Just a Gimmick?," SoundCloud, "Q&A: Our New Content Identification System," and YouTube Help, "How Content ID Works" for more on fingerprinting for 'smart speakers' and Content ID.

contemplation."[42] "Sound-reproduction technologies represented the promise of science, rationality, and industry and the power of the white man to co-opt and supersede domains of life that were previously considered to be magical," he writes.[43]

The ear phonautograph, an early sound-reproduction device invented by Clarence Blake and Alexander Graham Bell in 1874, takes on new meaning for Sterne as the first in a long lineage of what he calls "tympanic" reproduction devices, in reference to the tympanum, or human eardrum.[44] By excising a human ear from the body of a dead medical patient, fastening the middle ear to a wooden frame, and attaching a mouthpiece and stylus to the device, Bell and Blake were able to turn the bodily apparatus into a crude inscription device, reorienting a sensory phenomenon once implicitly located in the human body toward the construction of "sound as the object of physics."[45] Nearly all sound-reproduction technologies today are indebted to this development, with every conventional microphone and speaker relying on refined approximations of this tympanic function in their ability to convert sound into an electric signal through a process of transduction.

---

[42] Sterne, *Audible Past*, 3.
[43] Ibid, 9.
[44] Ibid, 32.
[45] Ibid, 34.

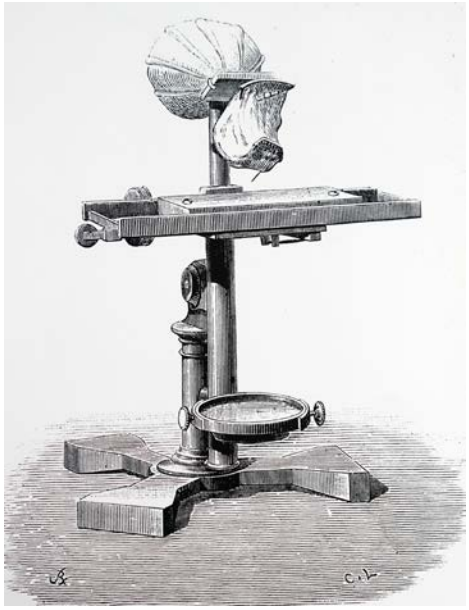

Figure 3: An 1876 model of Blake and Bell's phonautograph.[46]

Sterne's discussion of tympanic reproduction is echoed in the work of Friedrich Kittler, who in his work *Gramophone, Film, Typewriter*, notes that sound-reproduction technologies extend Sterne's rationalization of "sound as the object of physics" toward a contemporary understanding of sonified informatic data.[47] In contrast to the human ability to identify and filter certain "voices, words, and sounds out of noise," Kittler notes that the phonograph "does not hear as do ears," instead facilitating sound as "a second-order exception in a spectrum of noise."[48] For Kittler, sound becomes rationalized as "frequency curves" designed to be inscribed and played back by machines: "Technological sound storage provides a first model for data streams, which are simultaneously becoming objects or neurophysiological research," he writes.[49]

---

[46] Universal History Archive, "Bell's Phonautograph," Getty Images.
[47] Sterne, *Audible Past*, 32.
[48] Kittler, *Gramophone, Film, Typewriter*, 23.
[49] Ibid, 24-26.

Both Sterne and Kittler's descriptions demonstrate the fraught relationship between recorded sound and humanism, and it's here that the tympanic beginnings of sound reproduction mirror a broader history of computation. In her book *How We Became Posthuman*, N. Katherine Hayles aligns humanism with "a coherent, rational self, the right of that self to autonomy and freedom, and a sense of agency linked with a belief in enlightened self-interest."[50] Implicit in this definition is an understanding of the mind as a stable instantiation of bodily subjectivity, which for Hayles is subsequently problematized by developments in posthumanism which separate information from its material embodiments.[51] Similarly, Kittler's close attention to media technology is frequently read as a departure from interpretive modes of literary criticism toward technology-oriented "posthuman*ist*" scholarship.[52] This extends to his regard for the phonograph, which enables new technological arrangements no longer constructed by and for human perception. Amid these overlapping gestures, both Hayles and Kittler cite Alan Turing's Universal Turing machine and its effort to isolate cognitive processes once limited to the realm of human perception, recreating such processes with disembodied informatic data. As Hayles writes:

> "What the Turing test 'proves' is that the overlay between the enacted and the represented bodies is no longer a natural inevitability but a contingent production, mediated by a technology that has become so entwined with the production of identity that it can no longer meaningfully be separated from the human subject."[53]

---

[50] Hayles, *How We Became Posthuman: Virtual Bodies in Cybernetics, Literature, and Informatics*, 85-86.
[51] Ibid, 4.
[52] Winthrop-Young, "Silicon Sociology, or, Two Kings on Hegel's Throne? Kittler,Luhmann, and the Posthuman Merger of German Media Theory," 392.
[53] Hayles, *How We Became Posthuman*, xiii.

Like this reading of the Turing test, the tympanic function represents the beginning of a long history of sound's departure from the human body into instantiated forms of information, as Kittler's *Gramophone, Film, Typewriter* similarly demonstrates. The mere gesture of recorded audio playback relied on a reorientation of human perception, such that sound itself was no longer intrinsically connected to human voices, live instrumentation, or noisy acoustic environments, but could be inscribed and played back as "data streams" for use with phonographs, turntables, stereos, and eventually digital media players.[54] Machine listening can thus be read as an effort to situate sound reproduction within the broader emergence of computation in an effort to rationalize not only sound, but also perception itself for use in various computational settings.

At the same time, rationalized approximations of perception have long been part of sound's embodiment in recorded formats. As Jonathan Sterne notes in his book *MP3: The Meaning of a Format*, recorded file formats frequently rely on modes of audio compression to "economize a channel or storage medium in relation to perception" through a process he terms "perceptual technics."[55] While Spotify does not use the MP3 files studied by Sterne, instead relying on the open-source Ogg Vorbis format, each file remains a lossy approximation of perceptual experience, and it's from this space of economized perception that music information retrieval operates.[56] Music information retrieval, at leasts as used by Spotify, can thus be read as an effort to build systems

[54] Ibid, 26.
[55] Sterne, *MP3*, 51.
[56] Eriksson et al., *Spotify Teardown: Inside the Black Box of Streaming Music*, 167.

capable of extending the various rationalizations of sound present within lossy digital files into organizational system attuned to limits of these modes of already-economized listening.

1.4 Speech, Sound, and Code: Making Meaning in the Regime of Computation

Hayles' interest in the Universal Turing machine isn't limited to historic conceptualizations of the human, and in her book *My Mother Was a Computer*, she notes the emergence of a totalizing worldview built on the belief that the universe itself is fundamentally made up of a series of computable practices. Citing Turing's formalist definition of computation as well as Stephen Wolfram's *A New Kind of Science,* Hayles defines the "Regime of Computation" as an era marked by the belief that "computation does not merely simulate the behavior of complex systems," but instead "is envisioned as the process that actually generates behavior in everything from biological organisms to human social systems."[57] This "strong claim" for computation "reduces ontological requirements to a bare minimum," placing the binary base of transistor logic at the center of claims about the ontological makeup of the universe.[58] Information, and more specifically computational code, here becomes the material basis from which all social complexity emerges.

Hayles goes on to trace a historical continuity between speech, sound, and code, noting that computational information, like the probabilistic definition of information used by Shannon in his work on acoustics, fundamentally "emerges from a dialectic of

[57] Hayles, *My Mother Was a Computer: Digital Subjects and Literary Texts*, 18-19.
[58] Ibid, 19-22.

pattern and randomness, signal and noise."[59] Following the work of Ferdinand de Saussure and Jacques Derrida, Hayles points to an essential tension between speech and writing, citing Jonathan Culler's reading of Saussurean linguistics, which she sees as a fundamentally demateralist project. She writes, "Culler was not wrong in emphasizing differential relations rather than material constraints, for it is clear that Saussure's view of the sign tended toward dematerialization."[60] By contrast, Hayles stresses the underlying materiality of computation, suggesting that the binary base of transistor logic and its corresponding voltages serve as signifiers within this digital dialectic. "Because all these operations depend on the ability of the machine to recognize the difference between one and zero, Saussure's premise that differences between signs make signification possible fits well with computer architecture," she writes.[61]

Unlike speech, code is married to executable action, problematizing the central claims of Derridean deconstruction. While for Derrida, semantic meaning is endlessly deferred, a trace that has "no positive existence in itself and thus cannot be reified or recuperated back into a metaphysics of presence," code relies on an ontology of precision grounded in the binary base of transistor logic.[62] As computational efforts grow in scale and complexity, this space, once marked by an ambiguity of meaning in the gap between language and ontology, is translated into a relationship of fidelity—signal and noise as a metaphysics of presence and absence. She writes:

---

[59] Ibid, 66.
[60] Ibid, 43-44.
[61] Ibid, 45.
[62] Ibid, 46.

> "In the case of digital computers, noise enters the system (among other places) in the voltage trail-off errors discussed earlier, but these are rectified into unambitious signals of one and zero before they enter the bit stream...No matter how sophisticated the program, however, all commands must be parsed as binary code to be intelligible to the machine."[63]

From this perspective, machine listening can be read as an attempt to ground the abstract nature of speech, music, and other forms of information-rich sound in the material basis of computation. Where human listeners rely on a series of complex and highly contextual cognitive processes to locate meaning within an audio signal, machine listening is premised on a series of postivistic assumptions which reduce questions of interpretation to the most effectively-computable gestures. Cherry's cocktail party problem, with its aim to identify and separate an acoustic signal from noise for use by machines, thus becomes the basic challenge for machine listening of all types in the interest of designing systems which locate semantic meaning within audio computationally.

1.5. The Cocktail Party Problem

In their 2011 paper on the cocktail party problem, Tariqullah Jan and Wenwu Wang offer a useful summary of how computer scientists approach questions of acoustic analysis. Highlighting Albert S. Bergman's description of auditory scene analysis, the pair note that "time difference, level difference, and spectral difference" each play important roles in the "localization of sound sources."[64] According to the researchers, Bergman uses these sources in a two-tiered process of "sound segregation and sound

[63] Ibid, 46.

[64] Jan and Wang, "Cocktail Party Problem: Source Separation Issues and Computational Methods," 64.

determination," which organize sound by identifying sonic attributes through a process of "feature selection and feature grouping."[65] In short, auditory scene analysis aims to build machine listening systems that "separate mixtures of sound sources in the way that the human auditory system does."[66]

For Jan, Wang, Bergman, and others in the field, the complex process of human listening can be broken down into a series of constitutive parts in the interest of locating contextual meaning within sound. With a materialist understanding of audio made possible by Sterne's recognition of "sound as the object of physics," music information retrieval turns questions of human acoustic understanding into a series pragmatic challenges in the hands of software developers.[67] For the Echo Nest's "Analyze" system, this is most evident in their use of a machine listening process known acoustic features extraction, which identifies attributes like "key, loudness, time signature, tempo, beats, sections, [and] harmony" within the recorded audio signal.[68] In their 2014 software documentation for the system, Echo Nest founder Tristan Jehan and former audio engineer David DesRoches note that the software aims to make music useful for developers, extracting data that allow them to "understand, describe, and represent music."[59] This desire to make music functional underlies nearly all approaches to music information retrieval today, which not only problematize long-lasting assumptions

---

[65] Jan and Wang, "Cocktail Party Problem: Source Separation Issues and Computational Methods," 64.
[66] Jan and Wang, "Cocktail Party Problem: Source Separation Issues and Computational Methods," 64.
[67] Sterne, *Audible Past*, 34.
[68] Jehan and DesRoches, "Analyzer Documentation."

about human listening, but also call into question music's history as a commodifiable art form.

1.6 Music Information Retrieval and the Digital Music Commodity

As much as its material forms have changed, recorded audio has long been synonymous with music as a salable physical commodity. For Theodor Adorno, music inspired "ethereal and sublime" feelings in listeners, which later came to serve as mere advertisement for commodified media with the advent of the audio record.[69] While Adorno's understanding of the "fetish character" of recorded music offers an early example of the difficulty of accurately pricing individual media objects, 20th century formats like the MP3 file and digital media player further complicated notions of commodified media in the digital realm.[70] In *Selling Digital Music, Formatting Culture*, Jeremy Wade Morris defines the digital music commodity as "a particular combination of data and sound that exists as an entity in and of itself for sale or acquisition in online outlets via computers or other digital portable devices."[71] Just as CDs, cassette tapes, and vinyl records have unique affordances specific to their material instantiations, Morris draws on Jonathan Sterne's recognition of the "micromaterialization" of the MP3 to stress the relationship between the digital file and its container.[72] As a "fragmented commodity," digital files are regularly "re-tuned" by their software interfaces, which not only shape "how users view, hear, and interact with the music commodity and its

[69] Adorno, *The Culture Industry*, 38.
[70] Ibid, 38.
[71] Morris, *Selling Digital Music*, 2.
[72] Sterne, *MP3*, 194.

associated technologies," but also frequently serve as mediators between the commodity and its public-facing markets.[73] "The interface is what allows us to interact with digital objects as commodities. It is the point where user and commodity meet," he writes.[74]

This is not to say that the buying and selling of digital files has anything to do with its commodity status. For Morris, digital files exist as commodities largely due to their inseparability from historic understandings of recorded music; even without monetary transactions, listeners routinely collect and trade digital files over informatic networks in ways that, though not actively priced as individual commodities, still inspire them to treat each file as such. He writes:

> "Frequently, users who have not paid directly for files they download still feel and act as if they 'own' them...The interfaces, metadata, and micromaterials that make up digital music contribute to its objectness and to users' sense of propriety over it, even in the absence of a clear moment of purchase."[75]

Morris goes on to trace the history of digital audio technologies through the rise of popular music software like Winamp, Napster, and iTunes, noting the ever-shifting commodity status of music in the digital age. But as users cease to ascribe any sense of propriety to individual digital files, does digital audio still maintain its commodity status when increasingly encountered as an ad-supported or subscription-based service native to digital platforms?

In a 2017 essay on the subject, Swedish piracy scholar Rasmus Fleischer challenges Morris' reading of the digital music commodity as a stable object of inquiry.

---

[73] Morris, *Selling Digital Music*, 3-17.
[74] Ibid, 18.
[75] Ibid, 20.

Stressing the significant differences between "a download service like iTunes Store and a streaming service like Spotify," Fleischer adheres to a stricter definition of commodification, instead asserting that "the one and only commodity sold to consumers by Spotify is the subscription."[76] Here, Spotify and other subscriptions services offer users access to their entire catalog, either for a single monthly subscription fee, or for 'free' in exchange for viewing and listening to occasional targeted advertisements. "In this case [of targeted advertisements], it is not the song itself that is sold to you, but your attention that is sold to advertisers," he writes.[77] This understanding the subscription builds on notions of Software as a Service (SaaS) popular in software development today, expanding the term to account for the commodification of an entire culture industry now as part of the platform economy.[78] While this discussion of SaaS and the mediating role that Spotify plays merging culture with the platform is expanded upon in the following two chapters, Spotify's commodification of digital audio exists at even the most foundational layers of its software stack in an effort to situate digital files within the broader logic of the digital platform.

1.7 Machine Listening and the Commodification of Perception

Music information retrieval becomes a useful point of entry into discussion of the commodification of digital audio, especially in the shift from the commodification of the digital file to the ad-supported and subscription-based services known today as digital

[76] Fleischer, "If the Song Has No Price, Is It Still a Commodity? Rethinking the Commodification of Digital Music," 149.
[77] Fleischer, "If the Song Has No Price," 157.
[78] Kaldrack and Leeker, *There Is No Software, There Are Just Services*.

platforms. As an ambitious startup with connections to the Swedish peer-to-peer platform μTorrent, Spotify was notably built using pirated digital files, which were used by the company until exiting its beta period in 2008.[79] While this certainly predates their acquisition of the Echo Nest in 2014, Spotify has long relied on the company's API to power their music recommendations, and the Echo Nest's use of music information retrieval documents one of the earliest widespread successes of the technology, especially at the scale of a company like Spotify. Yet as noted in my earlier discussion of Jehan and DesRoches' Analyzer Documentation and Sterne's notion of "perceptual technics," the software is premised on a departure from human listening in an effort to build a system that approximates the limits of human perception already present in lossy digital files, grounding digital audio in the functional logic of the digital platform.[80]

Building on the technology present within lossy compression, music information retrieval can be described as an effort to locate meaning and value within digital audio through a distinction between signal and noise. In *My Mother Was a Computer*, N. Katherine Hayles notes that this utilitarian approach to meaning-making is a central part of how software reduces abstract human concepts of language and perception into a series of quantifiable solutions; what she calls the "Regime of Computation" represents some of the earliest engineering attempts to rationalize human cognition in the interest

[79] See Jones, "Early Spotify Was Built on Pirated MP3 Files, New Book Claims" and Eriksson et al., *Spotify Teardown*, 44-45 for more on Spotify's history.
[80] Sterne, *MP3*, 51.

of creating a machine fully capable of replicating human experiences.[81] Bound up within this informatic fragmentation of humanism is the human perception of acoustics, which as Jonathan Sterne and Friedrich Kittler both note, has been significantly altered by various rationalized approximations of acoustic perception that date back to the origins of recorded audio. Kittler's recognition of the mathematical "frequency curves" and "data streams" of sound mirror Hayles' discussion of embodied information, and machine listening, at least as the technology is used by Spotify, can be read as an attempt to make informatic audio useful by building software systems capable of organizing sound at the level of the audio signal.[82]

For the Echo Nest, this process is just one small part of digital music's shifting commodity status. Where the digital audio file and its interface once existed in a variety of commodified forms, Jeremy Wade Morris notes the inherent instability of their relationship; digital audio files were always dependent on their medial instantiations, both in the interfaces presented outwardly to the public and in the numerous software and hardware components that operate outside of public view, and increasingly, access to digital audio at all is premised on a transference of commodity status between song and software service. The Echo Nest's intersecting software tools reveal the monolithic nature of the platform to be grounded in a new rationalization of acoustic perception which extracts meaning and value from digital audio. In its efforts to "understand, describe, and represent music," Spotify uses digital audio as a raw material in ways that

---

[81] Hayles, *My Mother Was a Computer,* 18.
[82] Kittler, *Gramophone*, 24-26.

ultimately contribute to the commodification of the platform, and it's from this basis in the digital audio signal that Spotify increasingly organizes access to an entire culture industry, asserting itself as a mediating service in the process.[83]

[83] Jehan and DesRoches, "Analyzer Documentation."

2. The Algorithmic Logic of Spotify

2.1 Discover Weekly and the Quantification of Taste

On July 20, 2015, users noticed something new about their Spotify interfaces.[84] Seemingly overnight, the platform's "Discover page" had been overhauled completely, replaced by a square gradient, a profile photo of the user, and a 30-song playlist labeled "Discover Weekly."[85] The playlist was instantly popular with listeners, amassing 1.7 billion plays in its first six months, all while being touted as "Spotify's coolest feature" in the popular press.[86] As one early magazine feature noted, "Using Discover [Weekly] for the first time felt revelatory, like the first time I left AltaVista and Ask Jeeves for Google Search. The tracks it suggested weren't all perfect, but the ones it got right cut through the clutter of stale and timid recommendations I got from most music services."[87]

While the playlist caught on quickly with consumers, what was less apparent was how it actually worked in practice. Building on the early text mining and acoustic analysis approaches established by the Echo Nest, developers incorporated additional machine learning models trained on Spotify's user-generated playlists, which allegedly served as a "third leg" for the platform's burgeoning Taste Profile initiative.[88] As Ajay Kalia, product lead for Taste Profiles, explained at Barcelona's Sonar Festival in 2016, "What was added to this with Spotify data was the ability to understand how people

[84] Dredge, "Spotify Launches Discover Weekly Personalised 'Mixtape' Playlist."
[85] Kalia and Ogle, "Spotify Presents Discover Weekly & Taste Profiles."
[86] Luckerson, "Here's the Story Behind Spotify's Coolest Feature."
[87] Popper, "Tastemaker: How Spotify's Discover Weekly Cracked Human Curation at Internet Scale."
[88] Kalia and Ogle, "Spotify Presents Discover Weekly."

themselves are actually interacting with music."[89] Beyond the growing abundance of data collected from their catalog and discussion of it available online, playlists represented yet another cultural dimension to be made useful by software developers; in his summary of their history, Kalia describes the company's shift from merely a searchable music catalog to a platform capable of mobilizing user preferences based on the company's Taste Profiles. "What if we could flesh out this [recommendation] map for you and take everything that we know about music, and everything we know about you, and actually draw in those coasts and contours to figure out what really makes sense [to recommend]?"[90]

While user-contributed playlists have remained a central part of digital media players since the late 1990s, Discover Weekly set a precedent as one of the earliest efforts to mobilize Spotify's abundance of collected data toward new modes of platform-centric cultural consumption. The playlist, once a way to "mix and match digital music files" for personal use, became a functional unit of networked listening, a unique medium for developers to leverage data toward pragmatic ends in Spotify's recommendation system.[91] In an early magazine feature on the subject, *The Verge*'s Ben Popper makes repeated use of the term 'algorithm' to describe this elaborate data science practice.[92] He writes:

> "The algorithms behind Discover Weekly finds [sic] users who have built playlists featuring the songs and artists you love. It goes through songs that a

---

[89] Kalia and Ogle, "Spotify Presents Discover Weekly."
[90] Kalia and Ogle, "Spotify Presents Discover Weekly."
[91] Morris, *Selling Digital Music*, 62-63.
[92] Popper, "Tastemaker."

> number of your kindred spirits have added to playlists but you haven't heard, knowing there is a good chance you might like them, too."[93]

For Popper, like numerous journalists and music fans in the years since the piece's publication, Discover Weekly wasn't just a playlist, but a series of computational processes united by a single blanket descriptor. *Pitchfork*'s Eric Harvey makes a similar claim in his piece on the past, present, and future of music streaming, noting that while technological organization can feel like an inevitable response to the increasing abundance of digital audio, the "minor-but-pervasive stress of simply deciding what to listen to" is increasingly being managed by algorithms.[94] This sweeping invocation extends beyond music recommendation systems, emerging as a strange catch-all term for nearly any computational process that turns input data into an actionable outcome for users. In a 2014 essay on the subject, communications scholar Tarleton Gillespie highlights the increasingly broad use of the term in reference to search engines, recommendation systems, social networking sites, and more. "We might think of computers, then, fundamentally as algorithm machines—designed to store and read data, apply mathematical procedures to it in a controlled fashion, and offer new information as the output," he writes.[95]

This chapter addresses the growing role that algorithms play in everyday life, and the ways that these computational processes fit within the broader logic of digital platforms. No longer simply of interest to computer scientists, algorithms have found

---

[93] Popper, "Tastemaker."
[94] Harvey, "Station to Station: The Past, Present, and Future of Streaming Music."
[95] Gillespie, "The Relevance of Algorithms," 167.

their way into the lexicon of a growing number of fields including art, communications, and culture, especially as such disciplines are subjected to computational processes. As Gillespie and others recognize, the term is frequently used to ascribe agency to software as a stable object of inquiry, even as the technical operations it describes represent an increasingly complex entanglement of human and computational actors. With Spotify's Discover Weekly algorithm as a point of entry, I hope to demonstrate the role that personal data play for the company in their production of contingent music recommendations. Drawing on Robert Prey's notion of the "datafication of listening," I note that in Spotify's departure from more traditional understandings of the commodification of recorded audio, the mere act of listening to music has been transformed into an effort to target users with advertisements.[96] This process increasingly aligns with John Cheney-Lippold's understanding of "soft biopower and soft biopolitics" as "mechanisms of regulatory control," and, in drawing on the work of Michel Foucault and Gilles Deleuze, as well as Prey and Cheney-Lippold's more recent studies of digital media, I hope to demonstrate how Spotify's aim to commodify users' musical tastes fits within a broader landscape of platform capitalism, where personal data has become a new resource to be extracted by corporate actors for financial gain.[97]

---

[96] Prey, "Musica Analytica: the Datafication of Listening" in *Networked Music Cultures*, eds. Nowak and Whelan, 32.

[97] Cheney-Lippold, "A New Algorithmic Identity: Soft Biopolitics and the Modulation of Control," 175.

2.2 Taste Profiles and the Datafication of Listening

Spotify has long had access to the "age, gender, geography, language, and streaming habits" of listeners, and even prior to their acquisition of the Echo Nest, the company still profiled its users.[98] Much of what became Discover Weekly grew out of the Echo Nest's established practices of recording user behavior for what they termed the Taste Profile, a "persistent, real-time record of music play data (artists and songs) and behavior (favorites, ratings, skips and bans)."[99] Though the Taste Profile began as merely one part of the Echo Nest's larger effort to appeal to advertisers, the venture continued even after the company was acquired by Spotify, where their model was combined with an even bigger pool of listener data.[100]

If music listening could once be considered a private and personal act, today's most popular streaming services represent complex assemblages of networked actors that place advertising at the very root of this affective gesture. In his contribution to the 2016 collection *Networked Music Cultures*, Robert Prey suggests that this "datafication of listening" necessitates a fundamental shift in perception, one that acknowledges the ways that increasingly "all listening time is data-generating time," at least within the confines of the Spotify platform.[101] He writes:

> "The assumption is that the more accurately a streaming service is able to zero in on the tastes of the individual listener, the more time the listener will spend on a

[98] Eriksson et al., *Spotify Teardown: Inside the Black Box of Streaming Music*, 167.
[99] The Echo Nest, "Music Audience Understanding."
[100] Kalia and Ogle, "Spotify Presents Discover Weekly."
[101] Prey, "Musica Analytica," 32.

> service, and the higher the likelihood that they will convert to a paid subscription package."[102]

As Prey observes, more listening time generates more data about the listener's taste, which allows Spotify to establish more finely tuned Taste Profiles to offer to the company's advertisers. Often unbeknownst to the user, listeners are "being classified and categorised" into a variety of categories such as low-value or high-value listener, which have significant implications for personal privacy.[103] This is fundamentally linked to changes in music's commodification; where Jeremy Wade Morris' notion of the digital music commodity represents a once-accurate assessment of the intimate relationship between digital files and their interfaces, recorded audio increasingly surrenders any stable value once associated with the individual commodity to the platform, which is frequently described as "[selling] users' attention" to Spotify's advertisers.[104] As Rasmus Fleischer notes in his essay "If the Song has No Price, is it Still a Commodity? Rethinking the Commodification of Digital Music," "The decommodification of individual recordings (at the consumer's side), now coincides with the recommodification of music as an experience."[105]

In updating his understanding of the digital music commodity, Morris reaches a similar conclusion, nothing that the commodification of digital audio no longer exists at the level of the individual music file when accessed on ad-supported and subscription-based streaming platforms. Where digital files were once bought and sold as "discrete

---

[102] Ibid, 32.
[103] Ibid, 41.
[104] Fleischer, "If the Song Has No Price," 154.
[105] Ibid, 158.

musical objects," Morris and his collaborator Devon Powers claim that services like Spotify instead "sell branded musical experiences, inviting consumers to see themselves and their attitudes, habits, and sentiments about music reflected by the service they choose to adopt."[106] As Prey's work demonstrates, the Taste Profile's ever-expanding dataset is equally valuable to marketers, who increasingly rely on these branded musical experiences to serve effective advertisements. But where the Taste Profile is merely a dataset, Discover Weekly represents one of the earliest widespread encounters with this data-rich practice, bringing algorithmic music recommendations to the ears of listeners around the globe.

2.3 Discover Weekly and Algorithmic Culture

For many casual users, Discover Weekly felt like an important breakthrough for personalized music recommendations. The playlist received significant attention from users and journalists alike, who were quick to unite the complex series of computational processes beneath a single blanket descriptor, often known only as algorithms in popular discourse. As Popper and Harvey's earlier accounts demonstrate, algorithms—at least as used in shorthand—have come to embody a collection of specific assumptions about how data science operates, here in the transformation of the Taste Profile's expansive dataset into an active part of the everyday lives of users. As Harvey succinctly

[106] Morris and Powers, "Control, Curation, and Musical Experience in Streaming Music Services," 107.

states in his feature: "In what ways are the non-stop interactions between databases and algorithms shaping our musical tastes?"[107]

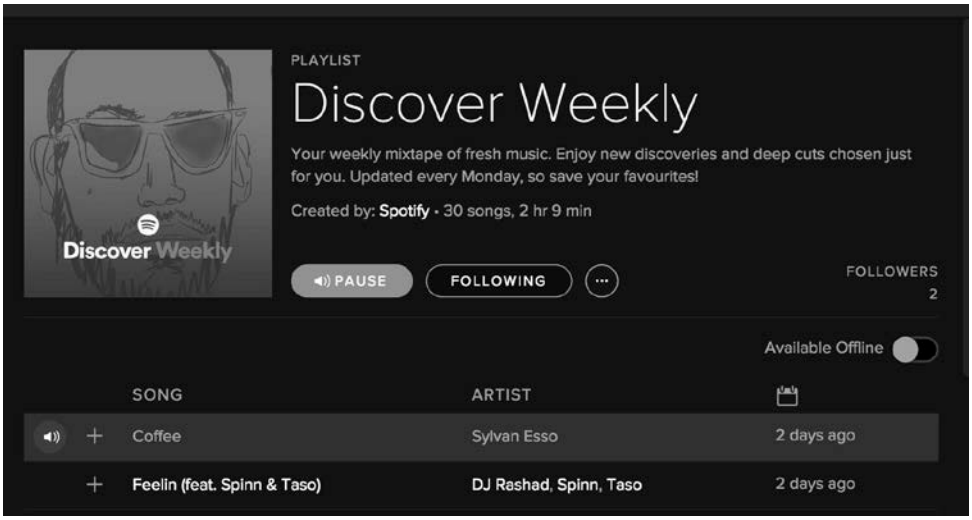

Figure 4: A 2015 screenshot of Spotify's Discover Weekly.[108]

The emergence of algorithms in popular discourse extends beyond music recommendations alone, where scholars like Taina Bucher, Nick Seaver, Ted Striphas, and Tarleton Gillespie have each taken up the algorithm as a central object of critical inquiry.[109] For Gillespie, the algorithms of search engines, social media platforms, and recommendation systems represent a "key logic governing the flows of information on which we depend."[110] Citing Andrew Goffey's definition of algorithms, which importantly "need not be software," Gillespie notes that the term embodies a broad collection of "encoded procedures for transforming input data into a desired output,

[107] Harvey, "Station to Station."

[108] Popper, "Tastemaker."

[109] See Bucher, *If...Then: Algorithmic Power and Politics*; Seaver, "Algorithms as Culture: Some Tactics for the Ethnography of Algorithmic Systems"; Striphas, "Algorithmic Culture"; and Gillespie, "The Relevance of Algorithms" for more on the relationship between algorithms and culture.

[110] Gillespie, "The Relevance of Algorithms," in Media Technologies: Essays on Communication, Materiality, and Society, eds. Gillespie, Boczkowski, and Foot, 167.

based on specified calculations."[111] Algorithms, as much as they can be addressed in abstraction, are premised on an effort to make data useful, to apply information from sources like the acoustic analysis, text mining, and personal listening behavior combined in Spotify's Taste Profile to functional ends in music recommendations. Yet as much as he stresses the political implications of algorithms as an emergent "knowledge logic" in today's computational landscape, Gillespie notes the importance of avoiding modes of technological determinism present in earlier work.[112] Algorithms are as much a social concern as they are a technological one, and in the essay, Gillespie compares algorithms to various "broadcasting and publishing technologies" to stress the increasing entanglement between algorithms and the public they serve.[113] Algorithms are "caught up in and are influencing the ways we ratify knowledge for civic life" in ways that, even without "putting the technology in the explanatory driver's seat," still rely on more computational processes than ever before.[114]

In addition to their social and political implications, algorithms can also be said to shape and be shaped by cultural life. Beyond connecting listeners with recommended music and advertisers with desired demographics, data science practices like Spotify's aim to build software systems attuned to the cultural history of media consumption. Following Matthew Arnold's definition of culture in the context of literary canons, Blake Hallinan and Ted Striphas note that "engineers now speak with an unprecedented

---

[111] Gillespie, "The Relevance of Algorithms," 167.
[112] Ibid, 168.
[113] Ibid, 169.
[114] Ibid, 169.

authority on the subject [of culture], suffusing *culture* with assumptions, agendas, and understandings consistent with their disciplines."[115] By subjecting a growing number of cultural works to systems modelled on biases of the past, a kind of "algorithmic culture" emerges in the use of computational tools to "sort, classify, and hierarchize people, places, objects, and ideas, and also the habits of thought, conduct, and expression that arise in the relationship to those processes."[116] In their analysis of Netflix, the pair describe the company's shift away from conventional marketing categories like "age, race, ethnicity, class, gender, and sexuality" to instead rely on a weighted approach known as singular value decomposition, or SVD.[117] For Hallinan and Striphas, this process fits within a "techno-culture tradition" which removes human viewers from the subjective experiences of their identities, positioning "white masculine engineering culture" as the default from which structural decisions about culture and canonical inclusion subsequently emerge.[118]

2.4 The Soft Biopolitics of Algorithmic Culture

This understanding of the cultural implications of algorithms is echoed in the work of John Cheney-Lippold, who in his 2011 essay "A New Algorithmic Identity: Soft Biopolitics and the Modulation of Control," suggests the emergence of new forms of identity shaped by digital platforms and their practices. Where once categories of identification like race, gender, and class each relied on a dialectical exchange between

[115] Hallinan and Striphas, "Recommended For You: The Netflix Prize and the Production of Algorithmic Culture," 119.
[116] Ibid, 119.
[117] Ibid, 123.
[118] Ibid, 123.

self-determination and public reception as described by scholars like Judith Butler, these categories are increasingly assumed and enacted by algorithms in the context of targeted advertising.[119] Cheney-Lippold writes:

> "Online a category like gender is not determined by one's genitalia or even one's physical appearance. Nor is it entirely self-selected. Rather, categories of identity are being inferred upon individuals based on their web use."[120]

As a series of "encoded procedures" for turning personal data into actionable practices, such algorithms are built on "pliable behavioral models" which trade stable categories of identity for mutable calculations dependent on the personal data at their disposal.[121] Categories like gender and race become digital abstractions that increasingly "[define] the meaning of maleness, femaleness or whatever other gender (or category) a marketer requires" with significant implications for lived experience.[122]

These fluid behavioral models extend to the world of targeted advertising on music streaming platforms. Spotify's efforts with the Taste Profile demonstrate the ways that this process of identity-driven advertising can be adapted to musical taste, which as Prey notes in his essay on the algorithmic individuation of music streaming platforms, are known to help "predict age, gender and lifestyle interests" for Spotify's marketers.[123] In his reading of Cheney-Lippold, Prey notes that on Spotify,"'Hispanic-ness' is performed into being through music listening behavior"; where the ethnicity could once be considered a stable category of self-identification, such identities are increasingly

---

[119] Butler, *Gender Trouble*.
[120] Cheney-Lippold, "A New Algorithmic Identity," 165.
[121] Ibid, 167-68.
[122] Ibid, 180.
[123] Prey, "Nothing Personal: Algorithmic Individuation on Music Streaming Platforms," 8.

performed by digital platforms through assumptions made largely without the user's knowledge or discretion.[124]

While this can, of course, be celebrated as a significant achievement for marketing technology, it also has significant implications for the basic conditions of informational access today. Drawing on Michel Foucault's notion of biopolitics as a series of "security mechanisms" used to "maximize and extract forces," as well as Gilles Deleuze's use of the concept in his 1992 essay "Postscript on the Societies of Control," Cheney-Lippold identifies modes of "soft biopower and soft biopolitics" used by digital platforms and their algorithms.[125] Where for Foucault, modes of social and political control are enacted through institutions like the school, hospital, factory, and prison, which trade traditional understandings of sovereign governance for softer modes of disciplinary power, Deleuze extends this logic to an internalized social order of "dividuals" composed of "masses, samples, data, [and] markets" which increasingly rely on forms of self-management.[126] In one example, he describes a single electronic card which would grant one access to their apartment, street, and neighborhood in ways that "could just as easily be rejected on a given day or between certain hours."[127] "What counts is not the barrier but the computer that tracks each person's position—licit or illicit—and effects a universal modulation," he writes.[128]

---

[124] Prey, "Nothing Personal," 9.
[125] Foucault, *Society Must Be Defended*, 246. Deleuze, "Postscript on the Societies ofControl." Cheney-Lippold, "A New Algorithmic Identity," 168-75.
[126] Deleuze, "Postscript on the Societies of Control," 5.
[127] Ibid, 7.
[128] Ibid, 7.

In updating this distinction to account for contemporary forms of online advertising, Cheney-Lippold notes that it's these biopolitical processes which "give meaning to the categorizations that make up populations."[129] Where categories of identification could once arguably be said to serve individuals in their relationship with public life, they are increasingly put into practice by profit-seeking organizations in the interest of monetizing user behavior. Extending these categories beyond advertising, Cheney-Lippold adds that those who are not categorized based on a particular identity could potentially be denied medical service, "enacting the consequences" of software governance.[130] He writes:

> "The identifications that make us as subjects online are becoming more opaque and buried, away from our individual vantage points and removed from most forms of critical participation. They are increasingly finding mediation outside the realm of traditional political intervention and inside the black boxes of search engines and algorithmic inference systems."[131]

As the basic actionable unit for "transforming input data into a desired output,"[132] algorithms thus become the connective tissue between software interfaces and the intentions of the companies that produce them. Mediating the terms of civic participation while inserting corporate interest into the mechanics of everyday cultural access, such software tools demonstrate the terms on which contemporary digital platforms are constructed, especially with regards to personal privacy.

---

[129] Cheney-Lippold, "A New Algorithmic Identity," 173.
[130] Ibid, 173.
[131] Ibid, 176.
[132] Ibid, 167.

This is not to say that algorithms are technologically determining. As Gillespie notes, algorithms sit at the intersection of social and technical concerns, as much products of technological culture as they are active participants. While the "pliable behavioral models" of targeted advertising reveal new frontiers vulnerable to technological control, Cheney-Lippold notes that this isn't necessarily a "revocation of autonomy."[133] In his reading of Wendy Chun's *Control and Freedom*, he notes that despite the looming fear of corporate surveillance present throughout his work, "control is never complete, and neither is our freedom."[134] This point extends to criticism of Spotify, which is as reliant on targeted advertising as it is shaped by dynamics present throughout the music industry. As many questions as it raises about the increasing presence of algorithmic mediation on music platforms, Spotify remains wed to the intentions of the so-called "big three" record labels (Warner Music Group, Universal Music Group, and Sony Music Entertainment), which as Rasmus Fleischer, Maria Eriksson, Anna Johansson, Pelle Snickars, and Patrick Vonderau note in their recent book *Spotify Teardown*, represent an "oligopoly that can act as a cartel when dealing with any music streaming service."[135] Similarly, targeted advertising wouldn't exist without advertisers eager to participate in this system, partly contributing to this system of Taste Profiles and "branded musical experiences" long embraced by Spotify.[136]

---

[133] Ibid, 168-177.
[134] Ibid, 177.
[135] Ingham, "Here's Exactly How Many Shares the Major Labels and Merlin Bought in Spotify And What Those Stakes Are Worth Now." Eriksson et al., *Spotify Teardown*, 32.
[136] Morris and Powers, "Control, Curation, and Musical Experience," 107.

2.5 Algorithmic Culture and the Regime of Computation

Despite clear differences across disciplines, algorithms are united in their efforts to mobilize computational data to functional ends. For music recommendation systems like Spotify's, this process is most visible in the relationship between Discover Weekly and the Taste Profile, an algorithm and dataset that fundamentally contribute to recorded audio's changing commodity status. Where the commodification of digital music was once most visible in the relationship between audio files and their interfaces, the shift toward what Morris and Powers have termed "branded musical experiences" has brought with it new concerns about the value of personal data in ways that extend beyond music alone.[111] As much as phrases like the 'datafication of listening' speak to sound's uniqueness among other forms of bodily perception, services like Spotify increasingly resemble other ad-supported digital media platforms like Facebook and YouTube, as well as numerous Software as a Service (SaaS) models such as Microsoft Office 365 and Adobe Creative Cloud in the shift from software as a shrink-wrapped commodity to networked subscription services.[137]

While aspects of music's commodification have long contributed to its cultural influence, algorithms and their datasets represent an important shift for digital music and its culture. As Blake Hallinan and Ted Striphas point out, recommendation systems introduce personal data into formerly-qualitative aspects of life, placing "white masculine engineering culture" at the center of cultural access.[138] While this isn't

---

[137] Prey, "Musica Analytica." Kaldrack and Leeker, *There Is No Software, There Are Just Services*.
[138] Hallinan and Striphas, "Recommended For You," 123.

exclusive to digital audio, with other media industries certainly shaped by white, able-bodied, heterosexual patriarchy since their inception, algorithms reveal an unprecedented entanglement between culture and technological mediation.

In her discussion of the "Regime of Computation," N. Katherine Hayles notes that computational procedures like the Universal Turing Machine are premised on efforts to rationalize human cognition into a series of computable outcomes.[139] In their departure from a stable understanding of the human as "a coherent, rational self, the right of that self to autonomy and freedom, and a sense of agency linked with a belief in enlightened self-interest," algorithms and their datasets rely on weighted, abstract models of human identity, ones which are frequently and problematically guided by economic incentives.[140] As Cheney-Lippold's reading of targeted advertising's "pliable behavioral models" demonstrates, such software systems make use of categories and identities that are radically different than those used in listeners' personal lives, placing advertising at the heart of musical access.[141] With the mere act of listening rendered into an economically-productive gesture, questions of wage labor and surplus value become more relevant than ever to discussion of music's commodification, which as Rasmus Fleischer acknowledges in his reading of Dallas Smythe's work on the audience economy, render Spotify "better understood not as a music distributor, but as a producer."[142]

---

[139] Hayles, *My Mother Was a Computer*, 18.
[140] Hayles, *How We Became Posthuman*, 85-86.
[141] Cheney-Lippold, "A New Algorithmic Identity," 168.
[142] Fleischer, "If the Song Has No Price," 156.

These questions and more animate discussion of Spotify as a digital platform, which like Facebook, Twitter, YouTube, and a growing number of other companies, has grown into an industry-shaping corporation through the commodification of unremunerated personal user data, in addition to paid subscriptions and stock market shares. Algorithms and their datasets become a crucial part of what makes digital platforms possible, subjecting individual users to the economic conditions necessary for platforms to operate at scale.

3. The Platformization of Digital Music

3.1 Platform Paradigm

In July 2014, Taylor Swift penned an op-ed in the *Wall Street Journal* encouraging artists to reconsider the value of their music. Describing an album as "based on the amount of heart and soul artist has bled into a body of work," the songwriter claimed that music streaming, like the piracy and file sharing strategies from which it emerged, was forcing artists and labels to find new ways to remain profitable in the absence of traditional album sales.[143] In the piece, Swift waxed romantically about the affective impact of music, describing an intimate relationship between artist and fan that was worth paying for, despite the increasing prevalence of ad-supported options. She writes:

> "Music is art, and art is important and rare. It's my opinion that music should not be free, and my prediction is that individual artists and their labels will someday decide what an album's price point is. I hope they don't underestimate themselves or undervalue their art."[144]

Swift would go on to remove her entire catalog from Spotify in November, with the president of her label later claiming that ad-supported services were "completely disrespectful" to committed fans.[145] Four days later, Spotify co-founder and CEO Daniel Ek published a statement addressing the dispute, opening with the claim that Swift was absolutely right to question the value of music on their service.[146] He writes, "We started

---

[143] Swift, "For Taylor Swift, the Future of Music Is a Love Story."
[144] Ibid.
[145] Knopper, "Taylor Swift Pulled Music From Spotify for 'Superfan Who Wants to Invest,' Says Rep."
[146] Ek, "$2 Billion and Counting."

Spotify because we love music and piracy was killing it. So all the talk swirling around lately about how Spotify is making money on the backs of artists upsets me big time."[147]

The statement goes on to stress the value of Spotify not through profits generated, but through the empowering platform that the company offers to artists. Unlike CD sales or digital downloads, where demographic data remain the proprietary knowledge of retailers and organizations like Nielsen SoundScan, Spotify's uniqueness ostensibly lies in its role as a connective intermediary, one which has become a central part of its identity as a platform. "Our whole reason for existence is to help fans find music and help artists connect with fans *through a platform* that protects them from piracy and pays them for their amazing work," Ek's statement continues.[148]

Throughout the last fifteen years, the word platform has taken on new meaning as a unified descriptor for a variety of networked services. Technology companies like YouTube, Amazon, Facebook, and Uber are frequently described as platforms, despite there being little consensus on how the term is used. As scholars like Tarleton Gillespie and Benedict Singleton have each pointed out, the word sits at the intersection of numerous definitions, used as much to describe industry-shaping technology companies as it is to characterize the pseudo-civic 'platforms' from which their users speak.[149] Embedded within this linguistic ambiguity lies a specific attempt to position these companies as neutral arbiters of information, all while "eliding the tensions inherent in

---

[147] Ibid.
[148] Ibid.
[149] Gillespie, "The Politics of 'Platforms.'" Singleton, "On Craft and Being Crafty."

their service," as Gillespie points out in his discussion of YouTube.[150] Where Ek and his company use the term to describe an artist's ability to connect with fans through their service, the word is taken up elsewhere to describe a "new business model, capable of extracting and controlling immense amounts of data" with the rise of economy-shaping intermediaries like Spotify.[151] For Nick Srnicek and Benjamin Bratton, platforms represent a new development in the organizing logic of global capitalism, one that adapts digital innovation to world-shaping economic ends on an unprecedented scale. As Spotify has continued to grow from a Swedish upstart into the world's most popular music streaming service, the company has positioned itself as a platform in much the same way, leveraging its abundance of collected data to attract advertisers, market itself to investors, and eventually facilitate measurable growth throughout the world.[152]

This chapter addresses the numerous intersecting claims at work beneath the word platform in popular use. More than merely a descriptor for technology companies like YouTube and Facebook, the term is frequently employed in a variety of computational, architectural, figurative, and political contexts, and can be viewed as a "broadly progressive sales pitch" to artists, users, and advertisers alike.[153] Implicit in this pitch is the notion of Spotify as a broker within a multi-sided market which, as Patrick Vonderau notes in his essay on the financialization of Spotify, facilitates the relationship

---

[150] Gillespie, "Politics of 'Platforms,'" 348.
[151] Srnicek, *Platform Capitalism*, 6.
[152] Schneider, "Universal Music Says Artists Would Benefit From a Spotify Equity Sale."
[153] Gillespie, "Politics of 'Platforms,'" 348.

between users and advertisers in a mutually-beneficial way.[154] From this perspective, Spotify's corporate behavior increasingly corresponds with the logic of what Nick Srnicek has termed "platform capitalism," leveraging its abundance of collected data to new ends through the constant restructuring of its algorithms and interfaces to achieve market dominance.[155] As a new kind of "planetary-scale information infrastructure," Spotify strives to find new efficiencies in the global economy, positioning itself as a centralized intermediary between artist, listener, and advertiser in a multi-sided market of its own creation.[156]

3.2 Defining Platforms

Digital platforms have become a prominent organizing force of 21st century global capitalism. They facilitate communication, provide access to information, connect communities, and increasingly determine the basic conditions of cultural access. Their interfaces shape decisions about what films to watch, their algorithms recommend what songs to enjoy, and their agreements with distributors frequently determine even the most basic access to digital media today. Yet the basic definition of the term often goes unquestioned, serving as a vague shorthand for a variety of concepts that make up many of today's most influential technology companies and their services.

In his discussion of the word's etymology, design theorist Benedict Singleton notes that 'platform' grew out of a variety of linguistic associations with architecture and

---

[154] Vonderau, "The Spotify Effect: Digital Distribution and Financial Growth."
[155] Srnicek, *Platform Capitalism*.
[156] Bratton, *The Stack: On Software and Sovereignty*, 264.

agriculture, namely through words like "plat, platte, and plot."[157] By the sixteenth century, these topographical uses of the term had made their way to the theater, where playwrights distinguished between the 'plot' and 'platform' of theatrical productions designed to capture the attention of their viewers. In his reading of Singleton's work, Benjamin Bratton points to this early connection between platforms and ocular attention, which animates his later discussion of digital technology.[158] Tarleton Gillespie makes a similar connection to the word's structural origins, separating its numerous definitions into four categories which each embody aspects of today's technology companies and their services. Citing the figurative, political, computational, and architectural origins of the term, Gillespie notes that the word has been used to describe everything from "subway and train platforms" to the increasing prevalence of the term in political spaces.[159] "Drawing these meanings together, 'platform' emerges not simply as indicating a functional shape: it suggests a progressive and egalitarian arrangement, promising to support those who stand upon it," he writes.[131]

These earlier uses contribute to contemporary understandings of the term designed as much to appeal to users as to the advertisers such companies rely on. Gillespie goes on to point out that as far back as 2007, YouTube adopted 'platform' in place of terms like "'website,' 'company,' 'service,' 'forum,' and 'community'" in a move to assert itself as an empowering service with the potential to elevate its users' voices.[160]

---

[157] Singleton, "On Craft and Being Crafty," 95.
[158] Bratton, *The Stack*, 43.
[159] Gillespie, "Politics of 'Platforms,'" 349-50.
[160] Ibid, 348.

Such claims represent an equally compelling proposition to advertisers, who continue to make up a significant portion of the company's funding today. For Gillespie, this duel use of 'platform' becomes part of a concerted effort to "present [YouTube] strategically to each of these audiences" as a technological intermediary with clear benefits for both parties.[161]

This rhetoric of empowerment is equally visible in Daniel Ek's discussion of Spotify as an egalitarian platform for its artists. Despite dealing more with the music of established stars than ordinary users, the gesture becomes a central part of Spotify's own efforts to position itself as an intermediary, managing the interests of artists and listeners through their technology, while also establishing value to advertisers through the targeted demographics available on the service, as discussed in the previous chapter. As Maria Eriksson, Rasmus Fleischer, Anna Johansson, Pelle Snickars, and Patrick Vonderau note in their recent book *Spotify Teardown*, the company began with very little of value to offer, "neither providing a cultural good, nor offering valuable contacts in the field of cultural production."[162] The roughly last decade of its existence can be seen as a gradual process to refine its role as an intermediary, taking up this rhetoric of empowerment in the absence of other, more traditional cultural offerings.

3.3 Multi-Sided Markets and Financialization

At the heart of this appeal to multiple parties lies a broader structural connection between business and computation. In an early white paper titled "Platform

[161] Gillespie, "Politics of 'Platforms,'" 353.
[162] Eriksson et al., *Spotify Teardown*, 2.

Competition in Two-Sided Markets," economists Jean-Charles Rochet and Jean Tirole describe platforms within the context of the two-sided, or multi-sided, markets that they increasingly facilitate. In a textbook setting, this generally involves the intermediary company setting independent prices for each party, mediating transactions between numerous actors in a mutually-beneficial way.[163] This practice can be seen in the prices Spotify sets for subscribers and advertisers, as well as the rates that the company pays out to artists, even as the economics have grown more complicated given the competitive (and increasingly automated) industries at play in Spotify's use of programmatic advertising.[164] Multi-sided markets signal an important continuity between digital platforms and more traditional economic organizations of the past, with economists routinely describing shopping malls and credit card companies as multi-sided in their ability to facilitate transactions between buyers, sellers, and other financiers.[165] From this perspective, Spotify merely adapts computational tools to larger economic challenges, establishing its value as a digital intermediary between these multiple parties in the process.

Embedded within the rhetoric of multi-sided markets lies the implicit 'financialization' of digital music. As Patrick Vonderau points out, Spotify's corporate practices render it much more similar to the world of finance than to any music or technology companies of the past; drawing on Andrew Leyshon and Nigel Thrift's definition of financial capitalism, Vonderau claims that Spotify "has become an integral

---

[163] Rochet and Tirole, "Platform Competition in Two-Sided Markets," 991.
[164] Vonderau, "Spotify Effect," 9.
[165] Rochet and Tirole, "Platform Competition," 1013. Eriksson et al., *Spotify Teardown*, 13.

part of *lending agreements* that are widespread in finance," most prominently through its seven rounds of venture capital funding and an eventual direct listing on the New York Stock Exchange, as exemplified in *Spotify Teardown*.[166] In an effort to repay this debt and reshape itself into profitable venture, the company has been forced to constantly seek out new revenue streams through a process that Vonderau, referencing Bruno Latour, describes as brokerage. "Spotting an opportunity in the structural hole between these two disconnected groups, the company's brokerage role developed as that of a market maker," he writes.[167] More than merely an intermediary, the company exists as a broker of targeted audience demographics, as well as the personal data that enables their existence.

3.4 Platform as Data Broker

While the financialization of digital media isn't exclusive to Spotify, with venture capital investment defining nearly every publicly traded technology company since at least the beginnings of the dot-com bubble, Spotify's constant efforts to streamline its role as an intermediary increasingly align with trends in technology companies of all types, namely as part of what Nick Srnicek has termed "platform capitalism."[168] To establish market dominance, technology companies are routinely forced to pursue new avenues of profit, which at a certain scale, look more and more the same across companies, despite the industries from which they came. For Srnicek, the platform emerges as a "new business model, capable of extracting and controlling immense

[166] Vonderau, "Spotify Effect," 4. Eriksson et al., *Spotify Teardown*, 13.
[167] Vonderau, "Spotify Effect," 6.
[168] Srnicek, *Platform Capitalism*.

amounts of data" in its efforts to secure monopoly status in the market.[169] Companies like Google, Apple, Amazon, Microsoft, and Facebook have become global monopolies by utilizing all the resources at their disposal, which for Srnicek means their increasing reliance on data as "a material to be extracted, refined, and used in a variety of ways."[170] Data routinely "educate and give competitive advantage to algorithms," enable new, increasingly international divisions of labor, and serve as the lifeblood for numerous research and development techniques.[171] "Data extraction is becoming a key method of building a monopolistic platform and siphoning off revenue from advertisers" he writes.[172]

As a broker situated between advertisers, users, and the music industry in a multi-sided market of its own creation, Spotify increasingly resembles a platform in Srnicek's sense, using data extracted from a variety of sources in an effort to maintain its position as the world's largest music streaming service. Earlier discussion of Spotify's acoustic analysis, text mining, and personal data collection processes serve as the most prominent examples of this process, but even as the company has shifted away from its web scraping practices, data remains a valuable resource for internal decisions about the company's future. Marketing efforts like their year-end Wrapped playlist are routinely justified to investors through engagement metrics, where data become a material

---

[169] Srnicek, *Platform Capitalism*, 6.
[170] Srnicek, *Platform Capitalism*, 40-41.
[171] Srnicek, *Platform Capitalism*, 40-41.
[172] Srnicek, *Platform Capitalism*, 58.

resource used to assert the company's value to investors as an intermediary.[173] All of this contributes to the company's efforts to monopolize its new role as broker through the abundance of data at their disposal. As Srnicek goes on to point out, platforms have an inherent affinity for monopoly—the more users a platform has, the more valuable the service becomes for others—which certainly contributes to Spotify's success as an intermediary.[174] Yet these "network effects" aren't entirely responsible for the company's success in this space, especially as it has recently begun to offer new analytics and direct upload features to musicians through their Spotify For Artists program.[175] Refining its role as an intermediary through the abundance of data at its disposal, the company can increasingly differentiate itself from the traditional roles of record labels and distributors, turning data into a new kind of product, of which it maintains complete control.

[173] Spotify, "Spotify Technology S.A. Announces Financial Results for Fourth Quarter 2018."
[174] Srnicek, *Platform Capitalism*, 45.
[175] Srnicek, *Platform Capitalism*, 45.

Conclusion

Despite its similarity to other technology companies, Spotify remains a difficult entity to make sense of in any totalizing way. For consumers, the company provides ad-supported and subscription-based access to a vast majority of the world's music. For marketers, the business offers programmatic advertising arrangements similar to those that have made companies like Google and Facebook among the most profitable in the world. For artists and workers in the music industry, the service increasingly resembles a boss or manager, quantifying the terms of success through trends present in listener data. Spotify is increasingly reshaping the basic conditions of these roles, positioning itself as a technological intermediary essential to the continued existence of the music industry, despite confusion from outsiders about the uniqueness of their intervention.[176] Sustained investments from the "big three" major record labels (Warner Music Group, Universal Music Group, and Sony Music Entertainment), as well as from private equity firms including Goldman Sachs, have cemented the company's place as a central part of cultural access today; while this does lend some degree of truth to Daniel Ek's Investor Day remarks about the shift in power enabled by Spotify, the company's current financial arrangement has only further complicated any understanding of digital music's commodity status, now as a near-inseparable part of the digital platform.[177]

---

[176] Eriksson et al., *Spotify Teardown*, 2.

[177] Ingham, "Here's Exactly How Many Shares the Major Labels and Merlin Bought in Spotify And What Those Stakes Are Worth Now." Eriksson et al., *Spotify Teardown*, 61. Ek, "Spotify Investor Day."

While platforms can feel like all-encompasing entities, a closer look at the structure of their technical arrangements reveal numerous intersecting software tools at work beneath their surface. What Anne Helmond has termed the "platformization" of the web always represented a developmental process in motion, one which utilized both digital tools and financial arrangements in an effort to achieve market dominance.[178] From this perspective, the "programming languages, package managers, databases, [and] libraries" that make up digital services all contribute to a process of capitalist expansion, serving as merely vehicles for a new kind of financial exchange.[179] In their contribution to the essay collection *There Is No Software, There Are Just Services*, Seth Erickson and Christopher Kelty note that at a certain scale, computational systems are frequently "layered into *stacks*," ones with "material, physical layers on the bottom and an increasing ephemerality as one ascends."[180] While they point out that the term has a variety of meanings, each use attempts to capture the ways that "software is always stacked, layered, or interconnected in progress" and that "no software is an island."[181]

The term is similarly taken up by Benjamin Bratton, who in his book *The Stack: On Software and Sovereignty*, describes the emergence of a new structure of "planetary-scale computation" identified by the same term.[182] Differentiating his notion of 'The Stack' from the term's frequent plural use in software development, he notes that "stacks are a kind of platform that also happens to be structured through vertical

---

[178] Helmond, "Platformization of the Web," 1.
[179] Erickson and Kelty, "Durability of Software," 45.
[180] Ibid, 45.
[181] Ibid, 45.
[182] Bratton, *The Stack*, 12.

interoperable layers, both hard and soft, global and local."[183] For Bratton, stacks provide a material basis for the internet, subsume cities within digital networks, and, shape the conditions of informational access throughout the world.[184] "If you start looking for them, 'stacks' are everywhere," he writes.[185] Applying the concept to the financialization of recorded audio on Spotify, Patrick Vonderau similarly adds that "digital markets thus resemble *stacks*—where trading sites are stacked into or on top of each other, in often opaque, unaccountable, and unsustainable ways."[186]

In adapting 'the stack' as the guiding model for my own work, I have identified three areas of focus—machine listening, recommendation algorithms, and platforms—in an effort to trace Spotify to its source in software tools. Each chapter of this thesis offers a snapshot of the service at a single scale, partly in an attempt to untangle its financialized complexity, but also in an effort to tell a general history of the company in its evolution into the biggest music streaming platform in the world. These are obviously very large tasks, and my work here is by no means exhaustive; entire books can and have been written on the subjects of each of these chapters, and this thesis is best understood as a kind of generalist's survey of much of the current literature published in the field.

As digital platforms continue to affect nearly every aspect of contemporary life, their structural makeup remains important to discussions of art, communications, and

---

[183] Bratton, *The Stack*, 52.
[184] Ibid, 52.
[185] Ibid, 52.
[186] Vonderau, "The Spotify Effect," 13.

culture, and my aim here is to stress the relevance of a media theoretical approach to these fields. Emphasizing the software dimensions of what's been increasingly abstracted into entities including algorithms, platforms, services, and even stacks in Bratton's expansive use, I hope to have demonstrated the continuity between sound and software across the previous three chapters, especially amid what Lev Manovich has termed the "softwarization" of digital media.[187] While stacks represents a variety of overlapping concepts, my work remains grounded in the term's earliest uses in software development, despite shifting away from a strict adherence to software in the last two chapters. As much as claims about multi-sided markets and financialization represent a new entanglement between business and computation, all operations are made possible by the platform's material basis in "programming languages, package managers, databases, [and] libraries," and it's from this basis that all Spotify's sprawling complexity emerges.[188]

[187] Manovich, *Software Takes Command*, 335.
[188] Erickson and Kelty, "Durability of Software," 45.

Appendix

In addition to this written component of my thesis, I also submitted a musical composition titled *"CylWidthSoundStasis."* A browser-based composition written in JavaScript for the Web Audio API, the generative piece uses logistical data extracted from Spotify's Audio Analysis API to create a second-order abstraction of looped sonic elements. Drawing inspiration from the indeterminate works of John Cage, namely his pieces *Music of Changes* and *Imaginary Landscape No. 4 (March No. 2)*, as well as Steve Reich's seminal essay "Music as a Gradual Process," the time-based work turns four categories of organizational data collected by Spotify's machine listening system (beats, bars, sections, and tatums) into aural components of a broader, site-specific work. Using the Auckland, New Zealand pop star Lorde's 2013 single "Royals" as the raw material for the piece, the work problematizes traditional understandings of listening as solely a human phenomenon, bringing aspects of Spotify's "machine listening" system into the realm of human perception. By looping each data point continuously for the remaining duration of composition, the piece grows into a sprawling abstraction of sonified data points in an effort to dramatize the order and disorder of so-called big data.

Bibliography

Adorno, Theodor W. *The Culture Industry: Selected Essays on Mass Culture*. London: Routledge, 2010.

ArtistsHouseMusic. "Music Industry Profile: Jim Lucchese of The Echo Nest." YouTube. January 24, 2012. Accessed March 11, 2019. https://youtu.be/LEiwv0lPs7k.

Bell's Phonautograph. 1878. Universal History Archive, Getty Images.

Bratton, Benjamin H. *The Stack: On Software and Sovereignty*. Massachusetts: MIT Press, 2015.

Bucher, Taina. *If...Then: Algorithmic Power and Politics*. New York: Oxford University Press, 2018.

Burgoyne, John Ashley, Ichiro Fujinaga, and John Stephen Downie. "Music Information Retrieval." *A New Companion to Digital Humanities*, 2015, 213-28. doi:10.1002/9781118680605.ch15.

Butler, Judith. *Gender Trouble: Feminism and the Subversion of Identity*. New York: Routledge, 1990.

Capes, Tim, Paul Coles, Alistair Conkie, Ladan Golipour, Abie Hadjitarkhani, Qiong Hu, Nancy Huddleston, Melvyn Hunt, Jiangchuan Li, Matthias Neeracher, Kishore Prahallad, Tuomo Raitio, Ramya Rasipuram, Greg Townsend, Becci Williamson, David Winarsky, Zhizheng Wu, and Hepeng Zhang. "Siri On-Device Deep Learning-Guided Unit Selection Text-to-Speech System." *Interspeech 2017*, 2017. doi:10.21437/interspeech.2017-1798.

Cheney-Lippold, John. "A New Algorithmic Identity: Soft Biopolitics and the Modulation of Control." *Theory, Culture & Society* 28, no. 6 (December 2, 2011): 164-81. Accessed March 11, 2019. doi:10.1177/0263276411424420.

Cherry, Colin E. *Some Experiments on the Recognition of Speech, with One and with Two Ears*. Woodbury, NY: American Institute of Physics for the Acoustical Society of America, 1953.

Cont, Arshia. "On the Creative Use of Score Following and Its Impact on Research." *IRCAM CNRS STMS*, 6 July 2011.

Downie, John Stephen. "Music Information Retrieval." *Annual Review of Information Science and Technology* 37, no. 1 (2005): 295-340. doi:10.1002/aris.1440370108.

Dredge, Stuart. "Spotify Launches Discover Weekly Personalised 'Mixtape' Playlist." Music Ally. July 20, 2015. Accessed March 12, 2019. https://musically.com/2015/07/20/spotify-discover-weekly-personalised-mixtape-playlist/.

Ek, Daniel. "Spotify Investor Day." Spotify Investors. Accessed March 11, 2019. https://investors.spotify.com/events/investor-day-march-2018/default.aspx.

Ek, Daniel. "$2 Billion and Counting." Spotify for Artists. November 12, 2014. Accessed March 12, 2019. https://artists.spotify.com/blog/2-billion-and-counting.

Eriksson, Maria, Rasmus Fleischer, Anna Johansson, Pelle Snickars, and Patrick Vonderau. *Spotify Teardown: Inside the Black Box of Streaming Music*. Cambridge: MIT Press, 2019.

Fleischer, Rasmus. "If the Song Has No Price, Is It Still a Commodity? : Rethinking the Commodification of Digital Music." *Culture Unbound: Journal of Current Cultural Research* 9, no. 2 (2017): 146-62. doi:10.3384/cu.2000.1525.1792146.

Foucault, Michel. *"Society Must Be Defended": Lectures at the Collège De France, 1975-76*. New York: Picador, 2003.

Fuchs, Christian. *Digital Labour and Karl Marx*. London: Routledge, 2015.

Gillespie, Tarleton. "The Politics of 'Platforms'." *New Media & Society* 12, no. 3 (2010): 347-64. doi:10.1177/1461444809342738.

Gillespie, Tarleton. "The Relevance of Algorithms." In *Media Technologies: Essays on Communication, Materiality, and Society*, eds. Gillespie, Boczkowski, and Foot, 2014, 167-94. doi:10.7551/mitpress/9780262525374.003.0009.

Hallinan, Blake, and Ted Striphas. "Recommended for You: The Netflix Prize and the Production of Algorithmic Culture." *New Media & Society* 18, no. 1 (2014): 117-37. doi:10.1177/1461444814538646.

Harvey, Eric. "Station to Station: The Past, Present, and Future of Streaming Music." *Pitchfork*. April 16, 2014. Accessed March 12, 2019. https://pitchfork.com/features/cover-story/reader/streaming/.

Haug, Wolfgang Fritz. *High-Tech-Kapitalismus: Analysen Zu Produktionsweise, Arbeit, Sexualität, Krieg & Hegemonie*. Hamburg: Argument-Verl., 2005.

Hayles, N. Katherine. *How We Became Posthuman: Virtual Bodies in Cybernetics, Literature, and Informatics*. University of Chicago Press, 1999.

Hayles, N. Katherine. *My Mother Was a Computer: Digital Subjects and Literary Texts*. Chicago: University of Chicago Press, 2005.

Helmond, Anne. "The Platformization of the Web: Making Web Data Platform Ready." *Social Media Society* 1, no. 2 (2015): 205630511560308. doi:10.1177/2056305115603080.

"How Content ID Works." YouTube Help. Accessed March 11, 2019. https://support.google.com/youtube/answer/2797370?hl=en.

Ingham, Tim. "Spotify Co-Founders Own An Estimated $1.8Bn Stake in Company." Music Business Worldwide. November 18, 2016. Accessed March 11, 2019. https://www.musicbusinessworldwide.com/spotify-co-founders-own-1-8bn-stake-in-company-say-estimates/.

Ingham, Tim. "Here's Exactly How Many Shares the Major Labels and Merlin Bought in Spotify And What Those Stakes Are Worth Now." Music Business Worldwide. May 14, 2018. Accessed March 11, 2019. https://www.musicbusinessworldwide.com/heres-exactly-how-many-shares-the-major-labels-and-merlin-bought-in-spotify-and-what-we-think-those-stakes-are-worth-now/.

Ion, Florence. "Could Google's 'Smart Sound' Be More Than Just a Gimmick?" Engadget. March 23, 2018. Accessed March 11, 2019. https://www.engadget.com/2018/03/23/google-smart-sound-gimmick/.

Jameson, Fredric. *Postmodernism Or, The Cultural Logic of Late Capitalism*. Durham: Duke University Press, 1991.

Jan, Tariqullah, and Wenwu Wang. In *Machine Audition: Principles, Algorithms, and Systems*, by Wenwu Wang. Hershey, PA: IGI Global, 2011. 61-79.

Jehan, Tristan, and David DesRoches. "Analyzer Documentation." The Echo Nest. January 7, 2014. Accessed March 11, 2019. https://web.archive.org/web/20140803053441/http://docs.echonest.com.s3-website-us-east-1.amazonaws.com/_static/AnalyzeDocumentation.pdf.

Jones, Rhett. "Early Spotify Was Built on Pirated MP3 Files, New Book Claims." Gizmodo. May 11, 2017. Accessed March 12, 2019. https://gizmodo.com/early-spotify-was-built-on-pirated-mp3-files-new-book-1795109991.

Kaldrack, Irina, and Martina Leeker. *There Is No Software, There Are Just Services*. Lüneburg: Meson Press, 2015.

Erickson, Seth, and Christopher M. Kelty. In *There Is No Software, There Are Just Services*, by Irina Kaldrack and Martina Leeker. Lüneburg: Meson Press, 2015. 39-55.

Kalia, Ajay, and Matthew Ogle. "Spotify Presents Discover Weekly & Taste Profiles." YouTube. June 16, 2016. Accessed March 12, 2019. https://youtu.be/qhYlmnqSDV0.

Kassler, Michael. "Toward Musical Information Retrieval." *Perspectives of New Music* 4, no. 2 (1966): 59. doi:10.2307/832213.

Kittler, Friedrich A. *Gramophone, Film, Typewriter*. Stanford, Calif: Stanford University Press, 1999.

Knopper, Steve. "Taylor Swift Pulled Music From Spotify for 'Superfan Who Wants to Invest,' Says Rep." *Rolling Stone*, November 8, 2014. Accessed March 11, 2019. https://www.rollingstone.com/music/music-news/taylor-swift-pulled-music-from-spotify-for-superfan-who-wants-to-invest-says-rep-164557/.

Luckerson, Victor. "Here's the Story Behind Spotify's Coolest Feature." *Time*. December 01, 2015. Accessed March 12, 2019. http://time.com/4131520/spotify-discover-weekly-playlists/.

Lyon, James. "Google's Next Generation Music Recognition." Google AI Blog. September 14, 2018. Accessed March 11, 2019. https://ai.googleblog.com/2018/09/googles-next-generation-music.html.

Manovich, Lev. *Software Takes Command*. New York: Bloomsbury, 2013.

Misra, Ananya, et al. "A New Paradigm for Sound Design." *Proceedings of the 9th International Conference on Digital Audio Effects*, 2006, www.researchgate.net/publication/250391261_A_New_Paradigm_for_Sound_Design.

Morris, Jeremy Wade. *Selling Digital Music, Formatting Culture*. Berkeley: University of California Press, 2015.

Morris, Jeremy Wade, and Devon Powers. "Control, Curation and Musical Experience in Streaming Music Services." *Creative Industries Journal* 8, no. 2 (2015): 106-22. doi:10.1080/17510694.2015.1090222.

Moulier-Boutang, Yann. *Cognitive Capitalism*. Polity Press, 2012.

"Music Audience Understanding." The Echo Nest. 2014. Accessed March 11, 2019. http://corpcdn.echonest.com.s3.amazonaws.com/filer_private/2014/01/27/audience_understanding_finalx.pdf.

Negri, Antonio, Michael Hardt, Danilo Zolo, and Emery. *Reflections on Empire*. Cambridge: Polity, 2008.

"Our Company." The Echo Nest. Accessed March 11, 2019. https://web.archive.org/web/20190103015218/http://the.echonest.com/company/.

Popper, Ben. "Tastemaker: How Spotify's Discover Weekly Cracked Human Curation at Internet Scale." *The Verge*. September 30, 2015. Accessed March 12, 2019. https://www.theverge.com/2015/9/30/9416579/spotify-discover-weekly-online-music-curation-interview.

Prey, Robert. "Musica Analytica: The Datafication of Listening." In *Networked Music Cultures: Contemporary Approaches, Emerging Issues*, by Raphaël Nowak and Andrew Whelan, 31-48. Basingstoke: Palgrave MacMillan, 2016.

Prey, Robert. "Nothing Personal: Algorithmic Individuation on Music Streaming Platforms." *Media, Culture & Society* 40, no. 7 (2017): 1-15. doi:10.1177/0163443717745147.

"Q&A: Our New Content Identification System." SoundCloud. January 5, 2011. Accessed March 11, 2019. https://web.archive.org/web/20110109013906/https://blog.soundcloud.com/2011/01/05/q-and-a-content-identification-system/.

Ramsey, Mark. "Spotify After Apple Music: Brian Benedik at Hivio 2015." YouTube. July 01, 2015. Accessed March 11, 2019. https://www.youtube.com/watch?v=pgWGZi4-EYk&t=1s.

Rochet, Jean-Charles, and Jean Tirole. "Platform Competition in Two-Sided Markets." *Journal of the European Economic Association* 1, no. 4 (2003): 990-1029. doi:10.1162/154247603322493212.

Rodehorst, Mike. "Why Alexa Won't Wake Up When She Hears Her Name in Amazon's Super Bowl Ad." Amazon. January 31, 2019. Accessed March 11, 2019. https://developer.amazon.com/blogs/alexa/post/37857f29-dd82-4cf4-9ebd-6ebe632f74d3/why-alexa-won-t-wake-up-when-she-hears-her-name-in-amazon-s-super-bowl-ad.

Schneider, Marc. "Universal Music Says Artists Would Benefit From a Spotify Equity Sale." *Billboard*. March 06, 2018. Accessed March 11, 2019. https://www.billboard.com/articles/business/8232274/universal-music-spotify-equity-sale-artists-share.

Seaver, Nick. "Algorithms As Culture: Some Tactics for the Ethnography of Algorithmic Systems." *Big Data & Society* 4, no. 2 (2017): 1-12. doi:10.1177/2053951717738104.

Sennett, Richard. *The Culture of the New Capitalism*. New Haven: Yale University Press, 2007.

Shannon, Claude E. "A Mathematical Theory of Communication." *Bell System Technical Journal* 27, no. 3 (1948): 379-423. doi:10.1002/j.1538-7305.1948.tb01338.x.

Shannon, Claude E., and Warren Weaver. *The Mathematical Theory of Communication*. Urbana: University of Illinois Press, 1964.

Singleton, Benedict. "On Craft and Being Crafty." Doctoral thesis. Northumbria University, 2014. http://nrl.northumbria.ac.uk/21414/.

"Spotify Acquires The Echo Nest." The Echo Nest. Accessed March 11, 2019. https://web.archive.org/web/20140308011903/http://the.echonest.com/pressreleases/spotify-acquires-echo-nest/.

"Spotify Technology S.A. Announces Financial Results for Fourth Quarter 2018." Spotify Investors. February 6, 2019. Accessed March 12, 2019. https://investors.spotify.com/financials/press-release-details/2019/Spotify-Technology-SA-Announces-Financial-Results-for-Fourth-Quarter-2018/default.aspx.

Srnicek, Nick. *Platform Capitalism*. Cambridge: Polity Press, 2017.

Sterne, Jonathan. *The Audible Past: Cultural Origins of Sound Reproduction*. Durham: Duke University Press, 2003.

Sterne, Jonathan. *MP3: The Meaning of a Format*. Durham: Duke University Press, 2012.

Striphas, Ted. "Algorithmic Culture." *European Journal of Cultural Studies* 18, no. 4-5 (2015): 395-412. doi:10.1177/1367549415577392.

Swift, Taylor. "For Taylor Swift, the Future of Music Is a Love Story." *The Wall Street Journal*, July 7, 2014. https://www.wsj.com/articles/for-taylor-swift-the-future-of-music-is-a-love-story-1404763219?ns=prod/accounts-wsj.

Vonderau, Patrick. "The Spotify Effect: Digital Distribution and Financial Growth." *Television & New Media* 20, no. 1 (2017): 3-19. doi:10.1177/1527476417741200.

Wang, Avery Li-Chun. "An Industrial-Strength Audio Search Algorithm." Shazam Entertainment, Ltd., 2003.

https://web.archive.org/web/20060512074748/https://www.ee.columbia.edu/~dpwe/papers/Wang03-shazam.pdf.

"Web API Reference." Spotify for Developers. Accessed March 11, 2019. https://web.archive.org/web/20181003103424/https://developer.spotify.com/documentation/web-api/reference/.

Whitman, Brian. "How Music Recommendation Works—and Doesn't Work." Variogram. December 11, 2012. Accessed March 11, 2019. https://web.archive.org/web/20170711214339/https://notes.variogr.am/2012/12/11/how-music-recommendation-works-and-doesnt-work/.

Winthrop-Young, Geoffrey. "Silicon Sociology, Or, Two Kings on Hegel's Throne? Kittler, Luhmann, and the Posthuman Merger of German Media Theory." *The Yale Journal of Criticism* 13, no. 2 (2000): 391-420. doi:10.1353/yale.2000.0027.